19" compatible AC/DC switched mode

11399008

EN 60950

Single, 130 W *ecopower*

- 19" compatible AC/DC switched mode power supplies, pluggable 3 U
- Wide range mains input voltage (90 – 254 V_{AC} and 100 – 360 V_{DC})
- Power factor correction (PFC) to EN 61000-3-2
- 1 output voltage
- Redundancy operation with integrated decoupling diode
- Even current share in the event of parallel operation via current share bus (CSB)
- Signalling: Output voltage OK
- For industrial and telecommunications applications
- International approvals EN 60950, UL
- High reliability and long life
- Cost-optimized

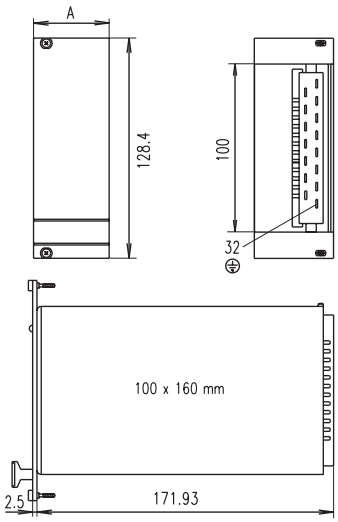

DIJM0084

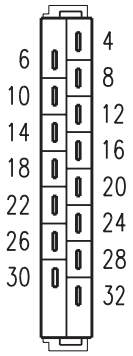

PSA46292

Pin	Connection
4	Output + V_1
6	
8	Sense + V_1
10	Sense 0V V_1
12	Output 0V V_1
14	
16	
18	
20	
22	CSB
24	Output OK
26	–
28	L
30	N
32	PE ⏚

Note
The front panel is not included in delivery.

Output data at T_U = 0 ... 50 °C					Order No.[1]		
Voltage in V	Current (with 190 V_{AC}) in A	Power output in W	Height in U	Width A in HP	Power supply Type	Mains voltage 90 – 254 V_{AC}	Front panel[2] EMC
3.3	22,0	72	3	12	SEG 103	**13100-090**	**21006-946**
5		110			SEG 105	**13100-091**	
12	11,0	132			SEG 112	**13100-092**	
15	8.8				SEG 115	**13100-093**	
24	5.5				SEG 124	**13100-094**	

[1] Please order front panel separately

[2] Front anodised, rear side chromated, slotted on both sides for mounting EMC contact strips in the event of increased EMC requirements
(3 U EMC contact strips, Order No. 21101-705, 10 pieces)

Mating connector H15F with FASTON connection, Order No. 69001-733

Technical data

Input parameters						
Mains-voltage	Nominal values V_{AC}	100 – 240 V_{AC}				
	Operating-ranges	90 – 254 V_{AC} 100 – 360 V_{DC}				
Mains nominal current at 90 V_{AC}		2 A				
Mains frequency range		50 – 60 Hz				
Power factor correction in accordance with		EN 61000-3-2				
Efficiency type		65 %	69 %	80 %		83 %
Switch-on current I_P (with 230 V_{AC})		< 20 A				
Output parameters at		**190/90 V_{AC}**				
Output power (50 °C) [W]		72/66	110/100	132/120		132/120
Output voltage [V]	factory set	3.3	5	12	15	24
	Adjustment range Δ V	2.6–3.5	4.6–5.3	10.6 – 15.4		21.8 –26
Output current [A]	0 ... 50°C	22/20		11/10	8.8/8	5.5/5
	UL values	20/18		10.5/9	8.4/7.2	5.5/5
Current limitation shuts the output off after approx. 5 ms, automatically resets after approx. 2 s, shuts power supply off following longer overload.		Permanently short-circuit resistant				
Residual ripple/ Interference voltage (BW: 30 MHz) [mV_{PP}]		< 200				
Mains and load control, static (load change 0 – 100 %) [mV_{PP}]		< 10		< 20		< 100
Temperature coefficient		-0.015 %/K				
CSB and output decoupled via diode		mounted				
Dynamic control deviations (load change: 10 ... 100 % with 100 Hz; dI/dt = 0.25 A/µs)						
Control time at 0.01 × $V_{1\ Nominal}$ [ms]		< 0.5				
Overshoot and undershoot amplitude [mV]		< 250				

Protection and monitoring facilities						
Switch-on time		< 1.5 s	< 0.8 s			
Mains fuse		4 A/250 V_{AC}, 5 × 20 mm, EN 60127-2/V				
Power failurebridging at 100 % load		SEG 103, -105, -124 > 20 ms SEG 112 > 10 ms SEG 115 > 5 ms				
Over-voltage protection OVP limits output voltage to		<7.2 V	<8.2 V	<19.5 V		<34.2V
Remote sense compensated		Max. 0.5 V				
"Output voltage ok" signalling		"Output OK" signal, active high				
	High level [V]	3.3	5	12	15	20
	Time delay	100 – 250 ms				
Test and environmental conditions						
Climatic test to		IEC 68-2-38				
Shock and vibration test in accordance with acceleration of 2 g		EN 60068-2-6				
Height 3 U/ depth 160 mm		Width 12 HP				
Weight (mass)		0.9 kg				
CE	Interference emission	EN 50081-1, EN 55011 Class B,				
	interference immunity,	EN 50082-2, EN 61000-4-2, EN 61000-4-3, EN 61000-4-4, EN 61000-4-5, EN 61000-4-6,				
	Safety, class of protection 1	EN 60950				
High voltage test to EN 60950	Input-output	4.3 kV_{DC}				
	Input PE	2.2 kV_{DC}				
	Output PE	0.7 kV_{DC}				
UL 1950		applied for				
Power supply maintenance-free		Yes				
Cooling		Convection				
Operation/storage ambient temperature		0 ... 70°C / -20 ... +85°C				
MTBF at full load, T_U = 40°C		310,000 h (5 V – 230,000 h)				

Schematic wiring diagram