THIS DRAWING IS UNPUBLISHED. RELEASED FOR PUBLICATION AUGUST ,2005.
© COPYRIGHT 2005 By – ALL RIGHTS RESERVED.

LOC	DIST
E	B

REVISIONS

P	LTR	DESCRIPTION	DATE	DWN	APVD
	B1	REVISED PER ECO–11–005033	01APR11	RK	HMR
	C	REVISED PER ECO–12–010042	29MAY2012	TITAN	MARTIN

NOTES

1. 100 TRAY PACK IN ACCORDANCE WITH AMP SPEC 107–3275
2. SINGLE PACK IN ACCORDANCE WITH AMP SPEC 107–3275
3. Au PLATING OVER Ni PLATING OVER Cu PLATING
4. Ni PLATING OVER Cu PLATING
5. FOR TECHNICAL DATA REFER TO YOUR LOCAL TE CONNECTIVITY SALES OFFICE
6. ALL DIMENSIONS ARE NOMINAL FOR REFERENCE ONLY UNLESS OTHERWISE STATED

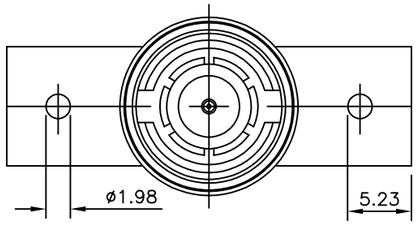

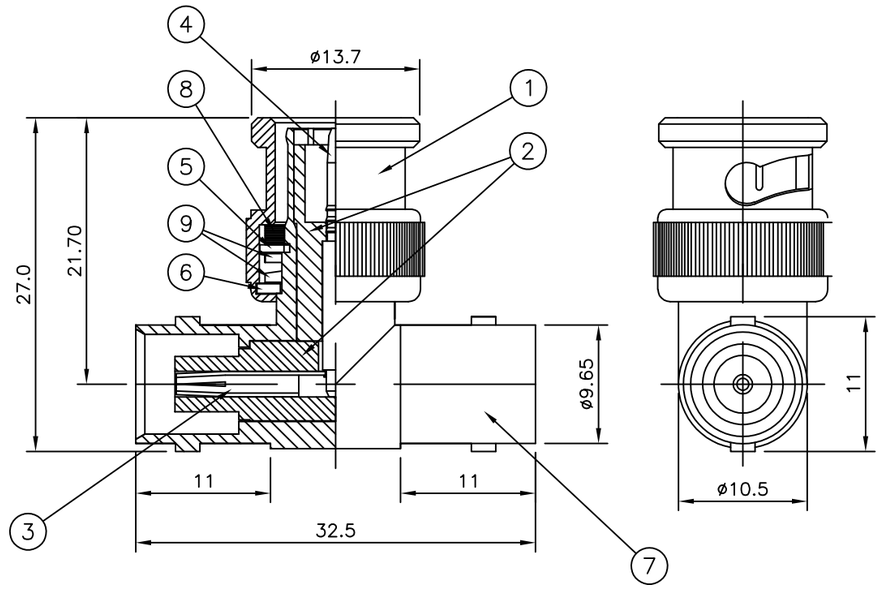

					Obsolete			
				1	1	SPRING STEEL	SPRING	9
				1	1	SILCON RUBBER	GASKET	8
				1	1	ZINC ALLOY 4	BODY	7
				1	1	BRASS 4	WASHER	6
				1	1	BRASS	CIRCLIP	5
				1	1	BRASS 3	MALE CONTACT	4
				1	1	PHOSPHOR BRONZE 3	FEMALE CONTACT	3
				2	2	PE–606	INSULATOR	2
				1	1	ZINC ALLOY 4	SHELL	1
				5––1	5––0	MATERIAL	DESCRIPTION	ITEM
				2	1			
QUANTITY PER ASSY						PARTS LIST		

THIS DRAWING IS A CONTROLLED DOCUMENT.

DIMENSIONS: mm

TOLERANCES UNLESS OTHERWISE SPECIFIED:

0 PLC	± 0.5
1 PLC	± 0.3
2 PLC	± 0.2
3 PLC	± –
4 PLC	± –
ANGLES	± –

MATERIAL: SEE TABLE

FINISH: SEE TABLE

DWN RITA ZUO 10 Mar 09
CHK ANSON MA 10 Mar 09
APVD BOB ZHAO 10 Mar 09
PRODUCT SPEC 108–112000
APPLICATION SPEC —
WEIGHT —

TE Connectivity

NAME: BNC T–ADAPTOR 50 OHMS –

SIZE	CAGE CODE	DRAWING NO	RESTRICTED TO
A3	00779	C–1634532	—

CUSTOMER DRAWING

SCALE NTS | SHEET 1 OF 1 | REV C

1470–19 (3/11)