THIS DRAWING IS UNPUBLISHED. RELEASED FOR PUBLICATION
© COPYRIGHT BY - ALL RIGHTS RESERVED.

LOC	DIST
A1	–

REVISIONS

P	LTR	DESCRIPTION	DATE	DWN	APVD
	A2	REVISED PER ECO-11-005301	13APR11	RK	HMR

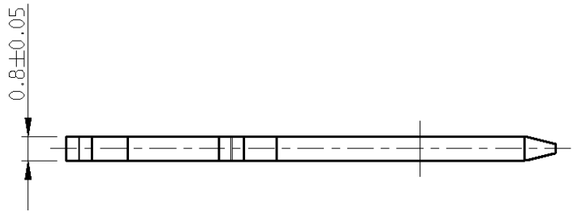

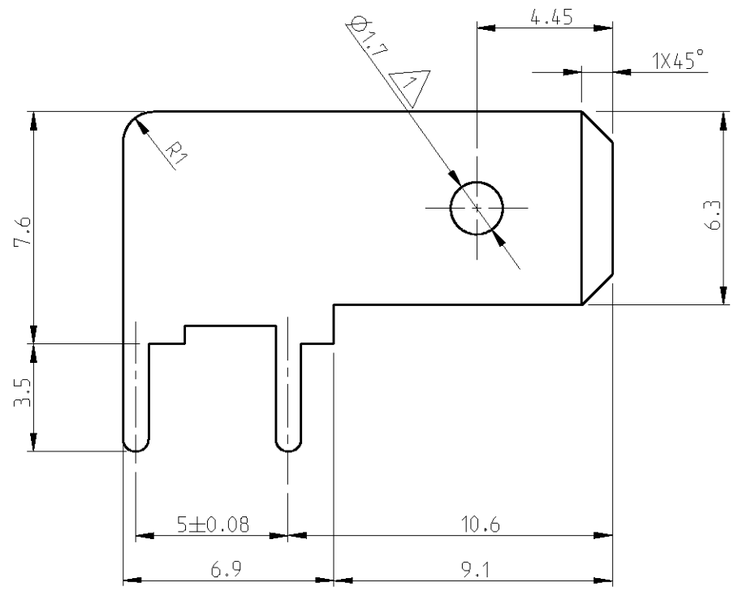

NOTES/BEMERKUNG

1. AUSFÜHRUNG 928814-4/-5/-6 OHNE LOCH
   EXECUTION 928814-4/-5/-6 WITHOUT HOLE
2. 3-7 µm Sn ÜBER 0.8 -1.5 µm Ni
   3-7 µm Sn OVER 0.8-1.5 µm Ni
3. 4-8 µm Sn
   4-8 µm Sn
4. ANLIEFERUNGSZUSTAND: EINZELWARE IN VERSANDKARTON
   DELIVERED STATE : LOOSE PIECE IN CORRUGATED SHIPPING BOX
5. LEITERPLATTENDICKE NACH EN 60249-2-4. TABELLE 3
   PCB-THICKNESS TO EN 60249-2-4. TABLE 3
6. OBSOLETE

SCALE 1:1

EMPFOHLENES LEITERPLATTEN LOCHBILD
RECOMMENDED PCB HOLE PATTERN

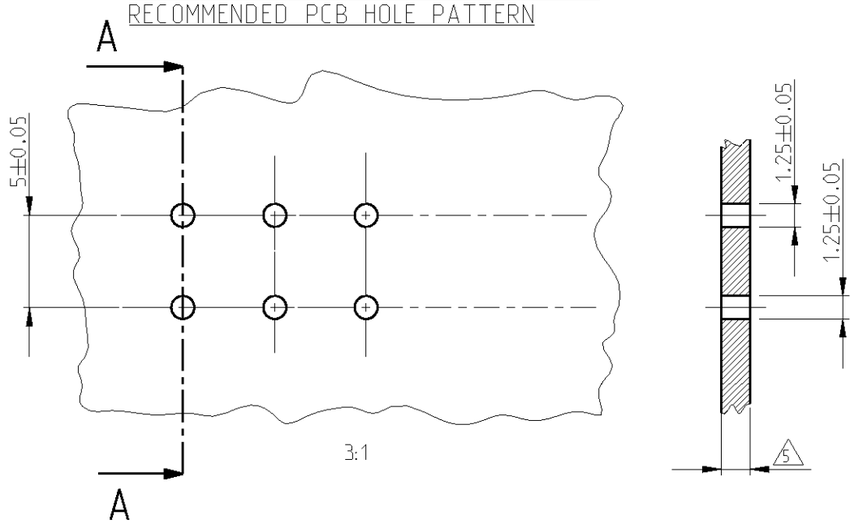

	FINISH	MATERIAL	PART NO	REV
1	BLANK	Cu Zn 30	4 928814-6	A
	3	↑	4 928814-5	A
	2		4 6 ~~928814-4~~	A
	BLANK		4 928814-3	A
	3	↓	4 928814-2	A
	2	Cu Zn 30	4 928814-1	A

DIMENSIONS: mm

TOLERANCES UNLESS OTHERWISE SPECIFIED: 0 PLC ±, 1 PLC ±, 2 PLC ±, 3 PLC ±, 4 PLC ±, ±0.2, ANGLES ±2°

MATERIAL SEE TABLE

FINISH SEE TABLE

DWN Dhanesh 06-Sep-07
CHK W.Hoffman 04-Okt-07
APVD Gerlach –
PRODUCT SPEC –
APPLICATION SPEC
WEIGHT –

TE Connectivity

NAME SOLDER TAB 6.3x0.8 FOR PCB

SIZE	CAGE CODE	DRAWING NO	RESTRICTED TO
A3		C-928814	–

CUSTOMER DRAWING | SCALE 2:1 | SHEET 1 OF 1 | REV A2

AMP 1470-19 REV 31MAR2000

Pro/ENGINEER DRAWING