EMKO

ESM-7730 72x72 DIN Size Process Controller

ESM-7730 72 x 72 DIN Size
Universal Input PID Process Controller

- *4 digits process value (PV) and 4 digits process set value (SV) display*
- *Universal process input (TC, RTD, mV ⎓, V ⎓, mA ⎓)*
- *Dual or multi point calibration for ⎓ Voltage / Current input*
- *Configurable ON/OFF, P, PI, PD and PID control forms*
- *Adaptation of PID coefficients to the system with Auto-tune and Self-tune*
- *Manual/Automatic mode selection for control output*
- *Bumpless transfer*
- *Programmable heating, cooling and alarm functions for control Output*

ABOUT INSTRUCTION MANUAL

Instruction manual of ESM-7730 process controller consists of two main sections. Also, there are other sections which includes order information and technical specifications of the device. All titles and page numbers in instruction manual are in "**CONTENTS**" section. User can reach to any title with section number.

Installation:

In this section, physical dimensions of the device, panel mounting, electrical wiring, physical and electrical installation of the device to the system are explained.

Operation and Parameters:

In this section, user interface of the device, how to access to the parameters, description of parameters are explained.

Also in these sections, there are warnings to prevent serious injury while doing the physical and electrical mounting or using the device.

Explanation of the symbols which are used in these sections are given below.

This symbol is used for safety warnings. User must pay attention to these warnings.

This symbol is used to determine the dangerous situations as a result of an electric shock. User must pay attention to these warnings definitely.

This symbol is used to determine the important notes about functions and usage of the device.

CONTENTS

1.PREFACE..... Page 5
- 1.1 GENERAL SPECIFICATIONS
- 1.2 ORDERING INFORMATION
- 1.3 WARRANTY
- 1.4 MAINTENANCE

2.INSTALLATION..... Page 8
- 2.1 GENERAL DESCRIPTION
- 2.2 DIMENSIONS
- 2.3 PANEL CUT-OUT
- 2.4 ENVIRONMENTAL RATINGS
- 2.5 PANEL MOUNTING
- 2.6 INSTALLATION MOUNTING CLAMP
- 2.7 REMOVING FROM THE PANEL

3.ELECTRICAL WIRING..... Page 13
- 3.1 TERMINAL LAYOUT AND CONNECTION INSTRUCTION
- 3.2 ELECTRICAL WIRING DIAGRAM
- 3.3 VIEW OF THE LABELS
- 3.4 CONNECTION OF DEVICE SUPPLY VOLTAGE INPUT
- 3.5 PROCESS INPUT CONNECTION
  - 3.5.1 TC (THERMOCOUPLE) CONNECTION
  - 3.5.2 RTD CONNECTION
  - 3.5.3 CONNECTION OF SERIAL TRANSMITTERS WITH CURRENT OUTPUT (LOOP POWERED) TO THE PROCESS INPUT
  - 3.5.4 CONNECTION OF 3-WIRE TRANSMITTERS WITH CURRENT OUTPUT TO THE PROCESS INPUT
  - 3.5.5 CONNECTION OF TRANSMITTERS WITH VOLTAGE OUTPUT TO THE PROCESS INPUT
- 3.6 GALVANIC ISOLATION TEST VALUES OF ESM-7730 PROCESS CONTROLLER

4.OUTPUT CONNECTION FORMS IN ESM-7730 PROCESS CONTROLLERS..... Page 21
- 4.1 PROCESS OUTPUT (SSR DRIVER OUTPUT) CONNECTION
- 4.2 ALARM OUTPUT -1 RELAY CONNECTION
- 4.3 PROCESS OUTPUT OR ALARM OUTPUT -2 RELAY CONNECTION

5.DEFINITION OF FRONT PANEL AND ACCESSING TO THE MENUS..... Page 23
- 5.1 FRONT PANEL DEFINITION
- 5.2 OBSERVATION OF SOFTWARE REVISION ON THE BOTTOM DISPLAY WHEN POWER IS ON
- 5.3 ADJUSTMENT OF PROCESS AND ALARM SET VALUES
- 5.4 EASY ACCESS DIAGRAM FOR PROGRAM PARAMETERS
- 5.5 ACCESSING TO THE TECHNICIAN MENU
- 5.6 CHANGING AND SAVING PARAMETERS

6.PARAMETERS..... Page 41
- 6.1 PROCESS / ALARM SET PARAMETERS
- 6.2 TECHNICIAN PARAMETERS
  - 6.2.1 SELECTION OF PID TUNE AND OPERATION FORM
  - 6.2.2 FUNCTION SELECTION FOR TOP AND BOTTOM DISPLAY
  - 6.2.3 PROCESS INPUT TYPE AND RELEVANT PARAMETERS WITH PROCESS INPUT
  - 6.2.4 PID CONFIGURATION PARAMETERS
  - 6.2.5 PROCESS OUTPUT CONFIGURATION PARAMETERS
  - 6.2.6 ALARM OUTPUT - 1 CONFIGURATION PARAMETERS
  - 6.2.7 ALARM OUTPUT - 2 CONFIGURATION PARAMETERS
  - 6.2.8 GENERAL PARAMETERS
  - 6.2.9 TECHNICIAN PASSWORD

7.FAILURE MESSAGES IN ESM-7730 PROCESS CONTROLLERS..... Page 64

8.SPECIFICATIONS..... Page 65

9.OTHER INFORMATION..... Page 66

EU DECLARATION OF CONFORMITY

Manufacturer Company Name : Emko Elektronik A.S..

Manufacturer Company Address: DOSAB, Karanfil Sokak, No:6, 16369 Bursa, Turkiye

The manufacturer hereby declares that the product conforms to the following standards and conditions.

Product Name : Process Controller

Model Number : ESM-7730

Type Number : ESM-7730

Product Category : Electrical equipment for measurement, control and laboratory use

Conforms to the following directives :

2006 / 95 / EC The Low Voltage Directive

2004 / 108 / EC The Electromagnetic Compatibility Directive

has been designed and manufactured to the following specifications :

EN 61000-6-4:2007 EMC Generic Emission Standard for the Industrial Environments

EN 61000-6-2:2005 EMC Generic Immunity Standard for the Industrial Environments

EN 61010-1:2001 Safety Requirements for electrical equipment for measurement, control And laboratory use

---

When and Where Issued

16th October 2009

Bursa-TURKEY

Authorized Signature

Name : Serpil YAKIN

Position : Quality Manager

1.Preface

ESM series process controllers are designed for measuring and controlling temperature and any process value.They can be used in many applications with their universal process input, control outputs, selectable alarm functions.

Some application fields and an application which they are used are listed below:

Application Fields	Application
Glass	PID Process Control
Plastic	
Petro-Chemistry	
Textile	
Automative	
Machine production industries	

1.1 General Specifications

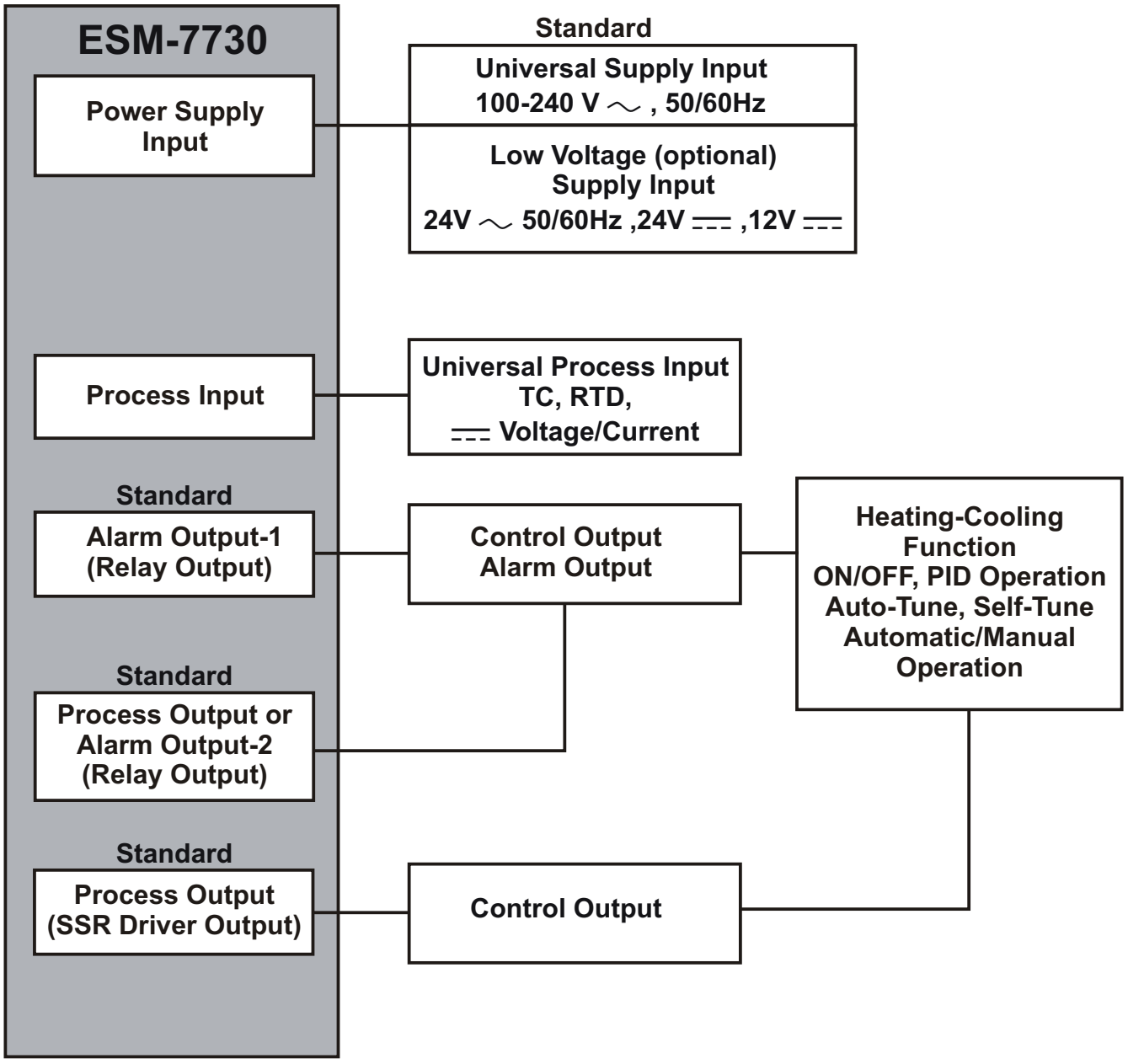

1.2 Ordering Information

ESM-7730 (72x72 DIN Size)	A	BC	D	E	/	FG	HI	/	U	V	W	Z
			0	1	/	01	02	/				

A	Supply Voltage
1	100-240V ~ (-15%;+10%) 50/60Hz
2	24 V ~ (-15%;+10%) 50/60Hz 24V ⎓ (-15%;+10%)
9	Customer (Maximum 240V ~ (-15%;+10%))50/60Hz

BC	Input Type	Scale
20	**Configurable (Table-1)**	**Table-1**

D	Serial Communication
0	None

E	Output-1
1	Relay Output (5A@250 V~ at resistive load)

FG	Output-2
01	Relay Output (5A@250 V~ at resistive load)

HI	Output-3
02	SSR Driver Output (Maximum 17mA, 25V ⎓)

All order information of ESM-7730 are given on the table at left. User may form appropriate device configuration from information and codes that at the table and convert it to the ordering codes.

Firstly, supply voltage then other specifications must be determined. Please fill the order code blanks according to your needs.

Please contact us, if your needs are out of the standards.

Table-1

BC	Input Type(TC)	Scale(°C)	Scale(°F)
21	L ,Fe Const DIN43710	-100°C,850°C	-148°F ,1562°F
22	L ,Fe Const DIN43710	-100.0°C,850.0°C	-148.0°F,999.9°F
23	J ,Fe CuNi IEC584.1(ITS90)	-200°C,900°C	-328°F,1652°F
24	J ,Fe CuNi IEC584.1(ITS90)	-199.9°C,900.0°C	-199.9°F,999.9°F
25	K ,NiCr Ni IEC584.1(ITS90)	-200°C,1300°C	-328°F,2372°F
26	K ,NiCr Ni IEC584.1(ITS90)	-199.9°C,999.9°C	-199.9°F,999.9°F
27	R ,Pt13%Rh Pt IEC584.1(ITS90)	0°C,1700°C	32°F,3092°F
28	S ,Pt10%Rh Pt IEC584.1(ITS90)	0°C,1700°C	32°F,3092°F
29	T ,Cu CuNi IEC584.1(ITS90)	-200°C,400°C	-328°F,752°F
30	T ,Cu CuNi IEC584.1(ITS90)	-199.9°C,400.0°C	-199.9°F,752.0°F
31	B ,Pt30%Rh Pt6%Rh IEC584.1(ITS90)	44°C,1800°C	111°F,3272°F
32	B ,Pt30%Rh Pt6%Rh IEC584.1(ITS90)	44.0°C,999.9°C	111.0°F,999.9°F
33	E ,NiCr CuNi IEC584.1(ITS90)	-150°C,700°C	-238°F,1292°F
34	E ,NiCr CuNi IEC584.1(ITS90)	-150.0°C,700.0°C	-199.9°F,999.9°F
35	N ,Nicrosil Nisil IEC584.1(ITS90)	-200°C,1300°C	-328°F,2372°F
36	N ,Nicrosil Nisil IEC584.1(ITS90)	-199.9°C,999.9°C	-199.9°F,999.9°F
37	C , (ITS90)	0°C,2300°C	32°F,3261°F
38	C , (ITS90)	0.0°C,999.9°C	32.0°F,999.9°F

BC	Input Type(RTD)	Scale(°C)	Scale(°F)
39	PT 100 , IEC751(ITS90)	-200°C,650°C	-328°F,1202°F
40	PT 100 , IEC751(ITS90)	-199.9°C,650.0°C	-199.9°F,999.9°F

BC	Input Type(⎓ Voltage and Current)	Scale
41	0...50 mV ⎓	-1999,9999
42	0...5 V ⎓	-1999,9999
43	0...10 V ⎓	-1999,9999
44	0...20 mA ⎓	-1999,9999
45	4...20 mA ⎓	-1999,9999

~ Vac,
⎓ Vdc
≂ Vdc or Vac can be applied

1.3 Warranty

EMKO Elektronik warrants that the equipment delivered is free from defects in material and workmanship. This warranty is provided for a period of two years. The warranty period starts from the delivery date. This warranty is in force if duty and responsibilities which are determined in warranty document and instruction manual performs by the customer completely.

1.4 Maintenance

Repairs should only be performed by trained and specialized personnel. Cut power to the device before accessing internal parts.
Do not clean the case with hydrocarbon-based solvents (Petrol, Trichlorethylene etc.). Use of these solvents can reduce the mechanical reliability of the device. Use a cloth dampened in ethyl alcohol or water to clean the external plastic case.

2.Installation

Before beginning installation of this product, please read the instruction manual and warnings below carefully.

In package ,
- One piece unit
- Two pieces mounting clamps
- One piece instruction manual

A visual inspection of this product for possible damage occured during shipment is recommended before installation. It is your responsibility to ensure that qualified mechanical and electrical technicians install this product.

If there is danger of serious accident resulting from a failure or defect in this unit, power off the system and separate the electrical connection of the device from the system.

The unit is normally supplied without a power switch or a fuse. Use power switch and fuse as required.

Be sure to use the rated power supply voltage to protect the unit against damage and to prevent failure.

Keep the power off until all of the wiring is completed so that electric shock and trouble with the unit can be prevented.

Never attempt to disassemble, modify or repair this unit. Tampering with the unit may results in malfunction, electric shock or fire.

Do not use the unit in combustible or explosive gaseous atmospheres.

During the equipment is putted in hole on the metal panel while mechanical installation some metal burrs can cause injury on hands, you must be careful.

Montage of the product on a system must be done with it's fixing clamps. Do not do the montage of the device with inappropriate fixing clamp. Be sure that device will not fall while doing the montage.

It is your responsibility if this equipment is used in a manner not specified in this instruction manual.

2.1 General Description

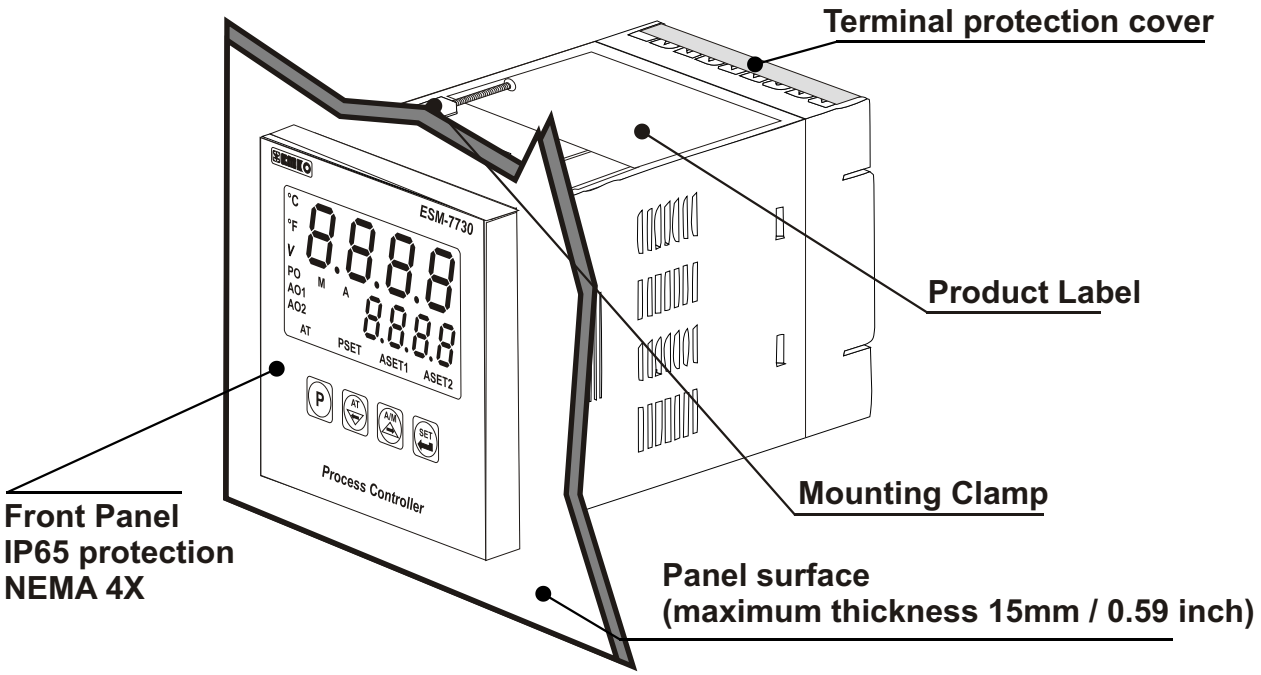

2.2 Dimensions

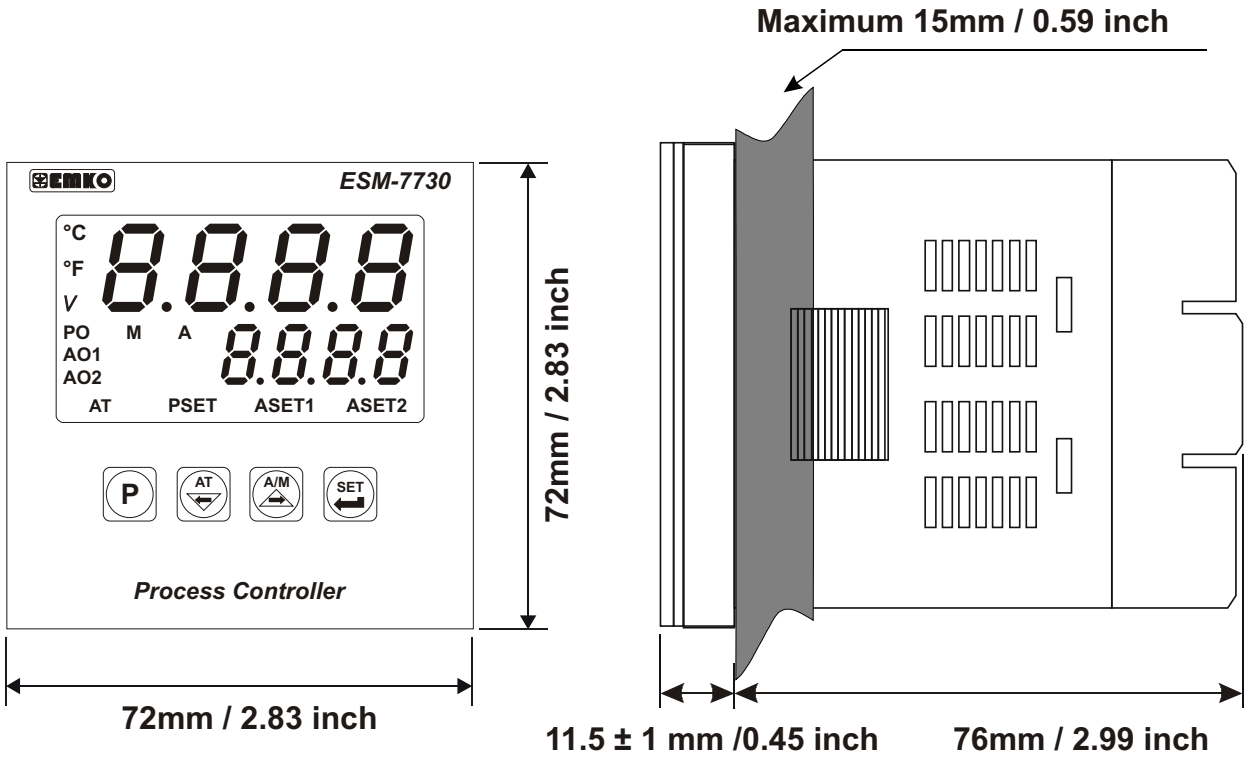

2.3 Panel Cut-Out

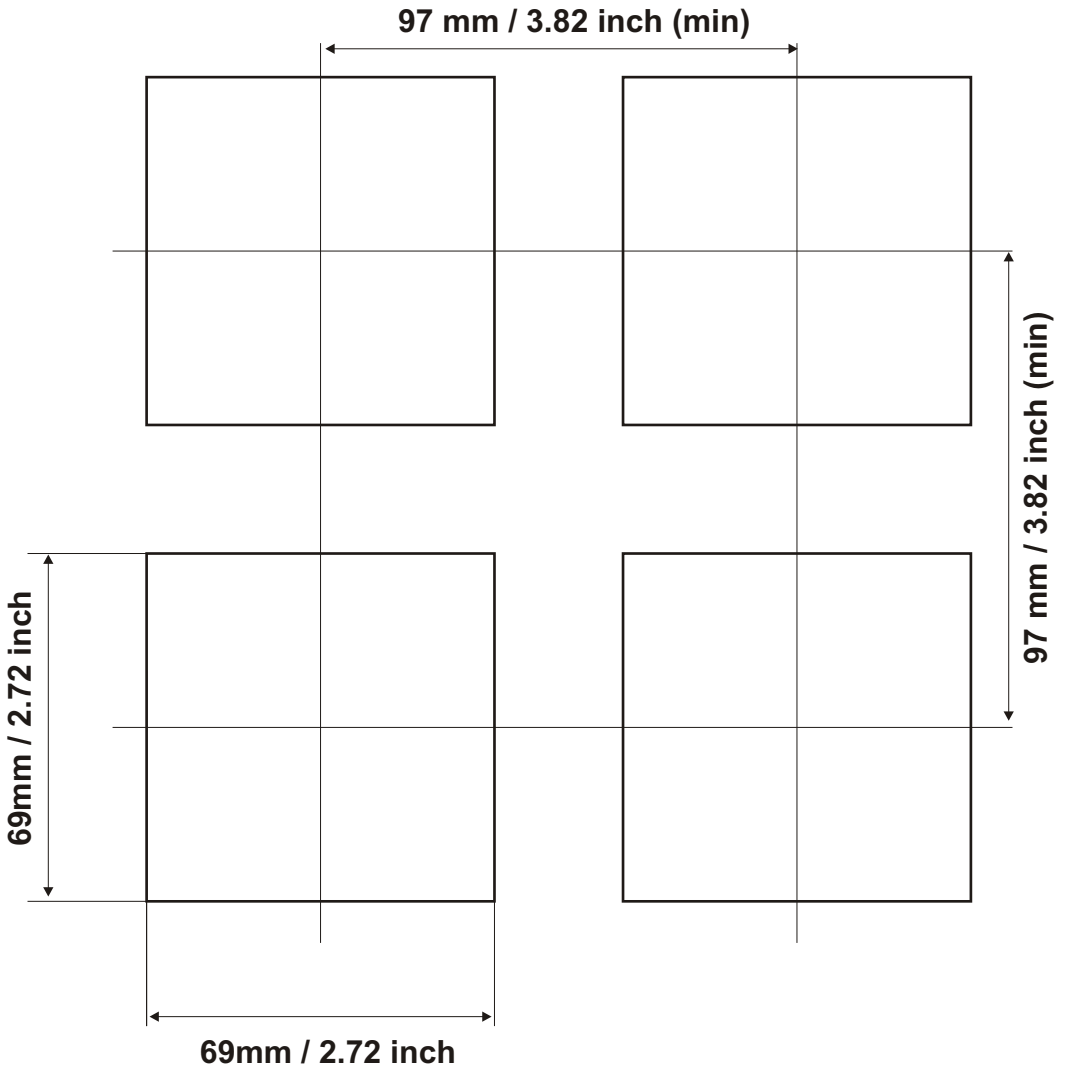

2.4 Environmental Ratings

Operating Conditions

Operating Temperature : 0 to 50 °C

Max. Operating Humidity : 90% Rh (non-condensing)

Altitude : Up to 2000m.

Forbidden Conditions:
Corrosive atmosphere
Explosive atmosphere
Home applications (The unit is only for industrial applications)

2.5 Panel Mounting

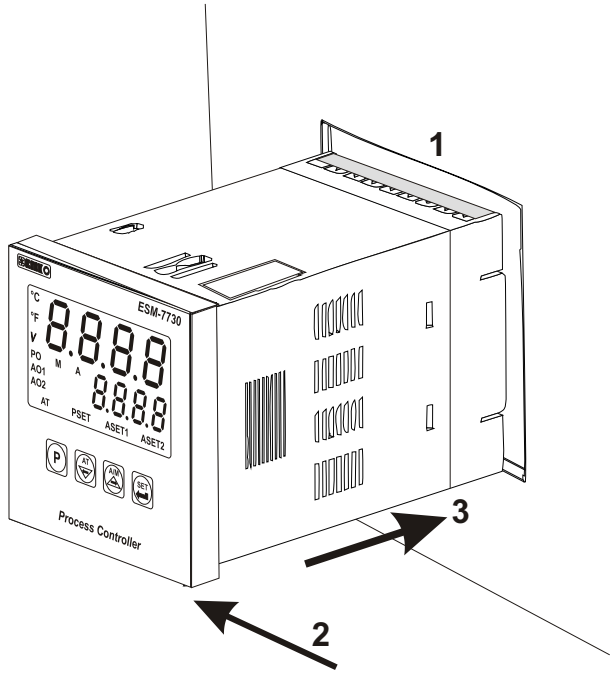

1-Before mounting the device in your panel, make sure that the cut-out is of the right size.

2-Check front panel gasket position

3-Insert the device through the cut-out. If the mounting clamps are on the unit, put out them before inserting the unit to the panel.

During installation into a metal panel, care should be taken to avoid injury from metal burrs which might be present. The equipment can loosen from vibration and become dislodged if installation parts are not properly tightened. These precautions for the safety of the person who does the panel mounting.

2.6 Installation Mounting Clamp

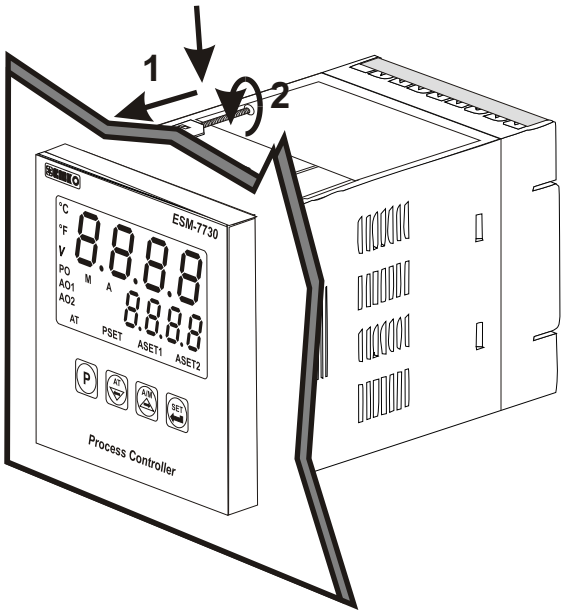

The unit is designed for panel mounting.

1-Insert the unit in the panel cut-out from the front side.

2- Insert the mounting clamps to the holes that located top and bottom sides of device and screw up the fixing screws until the unit completely immobile within the panel

Montage of the unit to a system must be done with it's own fixing clamps. Do not do the montage of the device with inappropriate fixing clamps. Be sure that device will not fall while doing the montage.

2.7 Removing from the Panel

Before starting to remove the unit from panel, power off the unit and the related system.

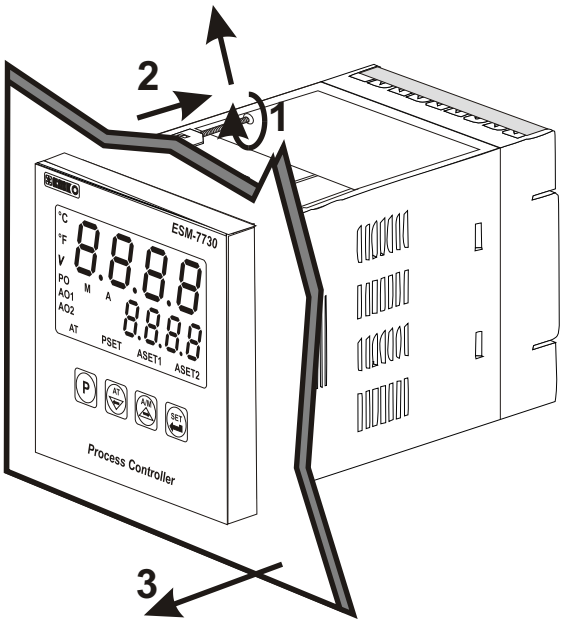

1-Loosen the screws.

2-Pull mounting clamps from top and bottom fixing sockets.

3-Pull the unit through the front side of the panel

3.Electrical Wiring

You must ensure that the device is correctly configured for your application. Incorrect configuration could result in damage to the process being controlled, and/or personal injury. It is your responsibility, as the installer, to ensure that the configuration is correct.
Parameters of the device has factory default values. These parameters must be set according to the system's needs.

Only qualified personnel and technicians should work on this equipment. This equipment contains internal circuits with voltage dangerous to human life. There is severe danger for human life in the case of unauthorized intervention.

Be sure to use the rated power supply voltage to protect the unit against damage and to prevent failure.

Keep the power off until all of the wiring is completed so that electric shock and trouble with the unit can be prevented.

3.1 Terminal Layout and Connection Instructions

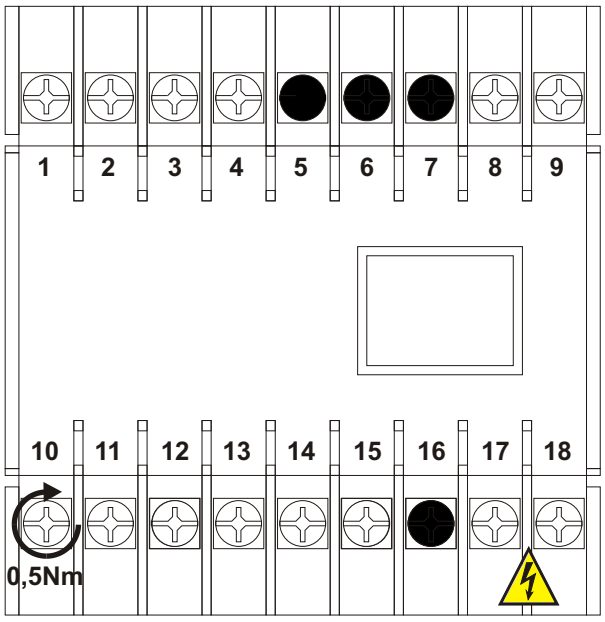

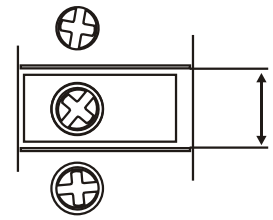

6 mm / 0.236 inch
Wire Size:
18 AWG / 1 mm²
Solid /Stranded

18 screws terminal
M3

Empty terminals

Torque 0.5 Nm

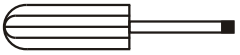

Screw driver

3.2 Electrical Wiring Diagram

Electrical wiring of the device must be the same as 'Electrical Wiring Diagram' below to prevent damage to the process being controlled and personnel injury.

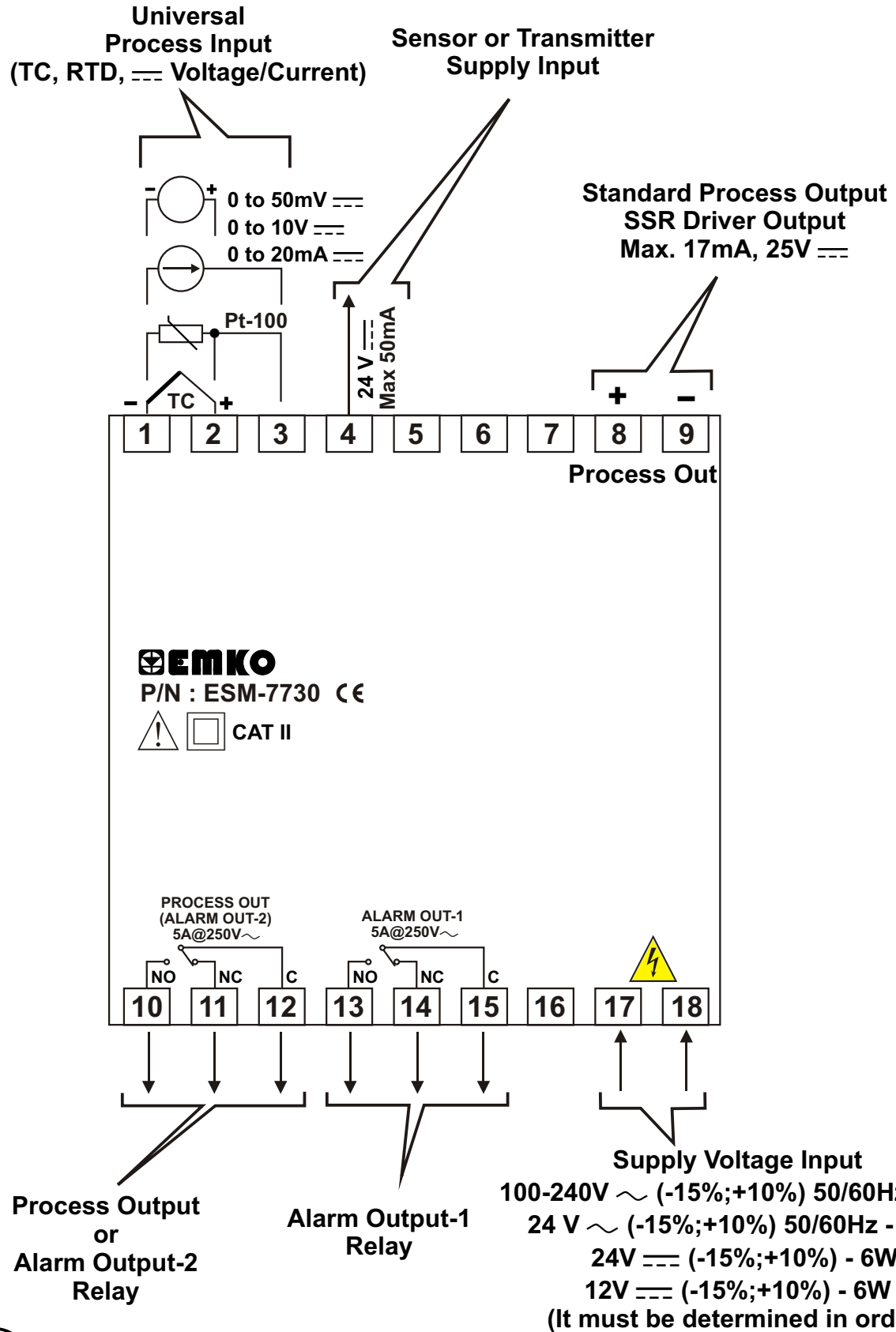

Process measurement input is in CAT II class.

3.3 View of the Labels

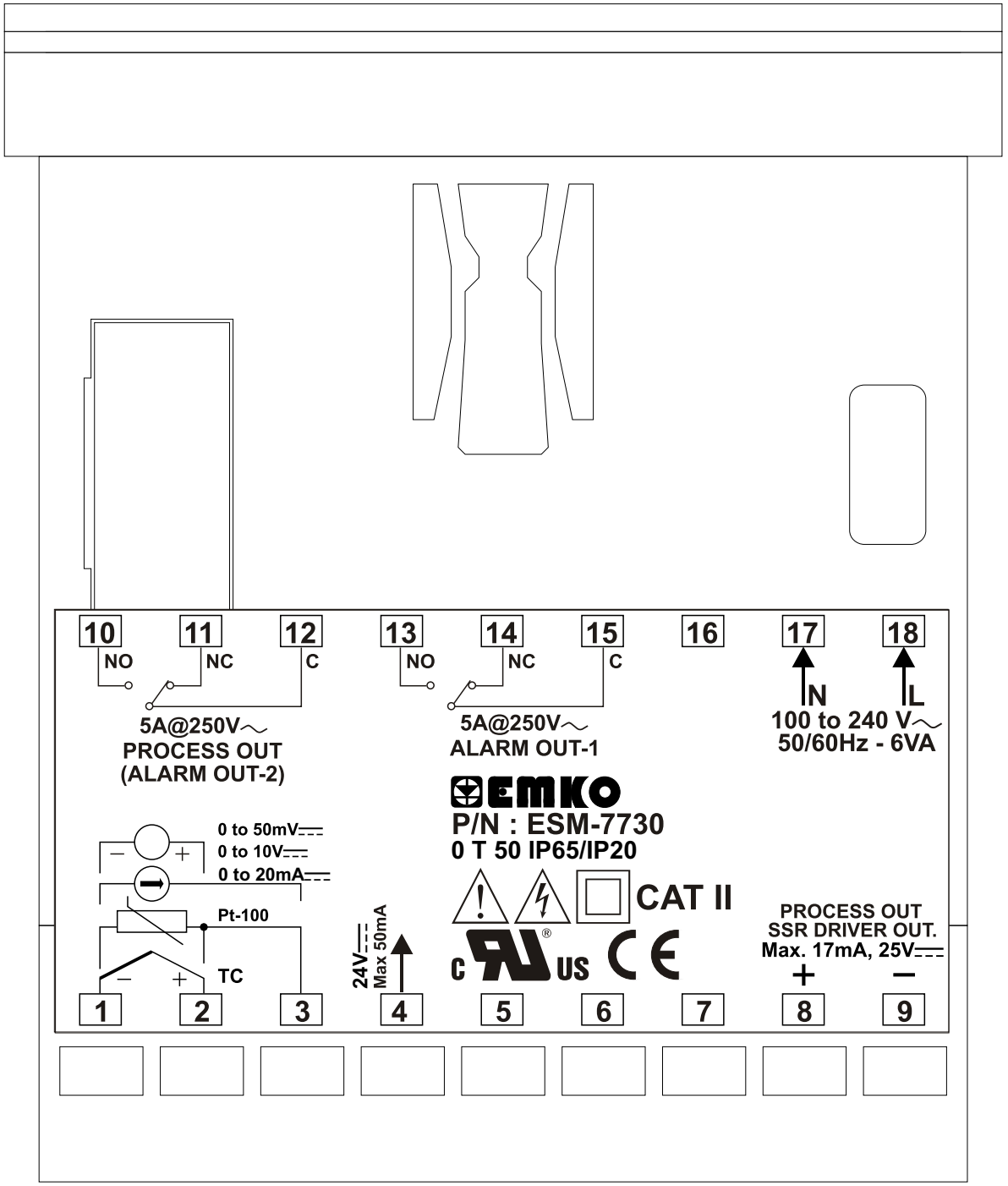

3.4 Connection of Device Supply Voltage Input

Universal Supply Voltage Connection

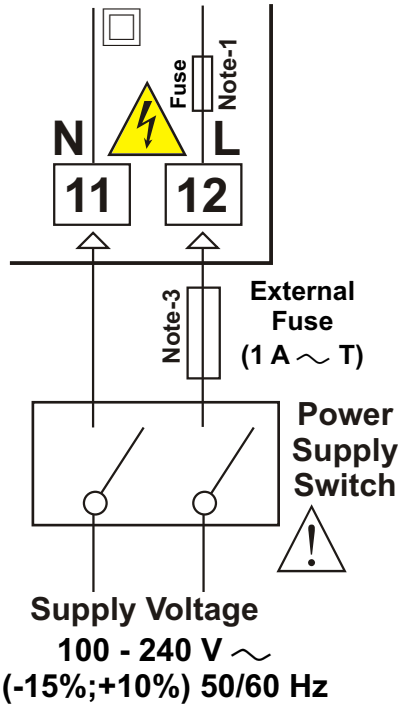

Low Voltage 24 V~ Supply Voltage Input

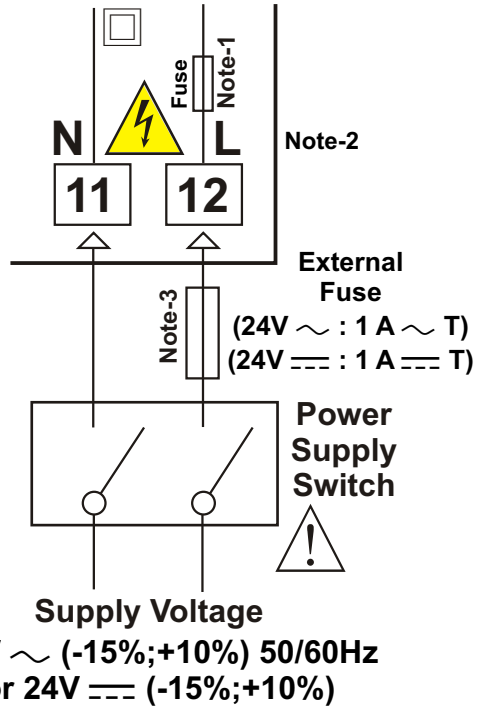

Note-1 : There is an internal 33R fusible flameproof resistor in 100-240 V~ 50/60Hz supply voltage input

There is an internal 4R7 fusible flameproof resistor in 24V~ 50/60Hz , 24V⎓ supply voltage input

Note-2 : "L" is (+) ," **N"** is (-) for 24V⎓ supply voltage

Note-3 : External fuse is recommended.

Make sure that the power supply voltage is the same indicated on the instrument.
Switch on the power supply only after that all the electrical connections have been completed.
Supply voltage range must be determined in order. While installing the unit, supply voltage range must be controlled and appropriate supply voltage must be applied to the unit. Controlling prevents damages in unit and system and possible accidents as a result of incorrect supply voltage.

There is no power supply switch on the device. So a power supply switch must be added to the supply voltage input. In accordance with the safety regulations, the power supply switch shall bring the identification of the relevant instrument.Power supply switch shall be easily accessible by the user.
Power switch must be two poled for seperating phase and neutral. On/Off condition of power switch is very important in electrical connection. On/Off condition of power switch must be signed for preventing the wrong connection.

If an external fuse is used, it must be on phase connection in ~ supply input.
If an external fuse is used, it must be on (+) line connection in ⎓ supply input.

The instrument is protected with an internal fuse (Please refer to Note1 for information). In case of failure it is suggested to return the instrument to the manufacturer for repair.

3.5 Process Input Connection

3.5.1 TC (Thermocouple) Connection

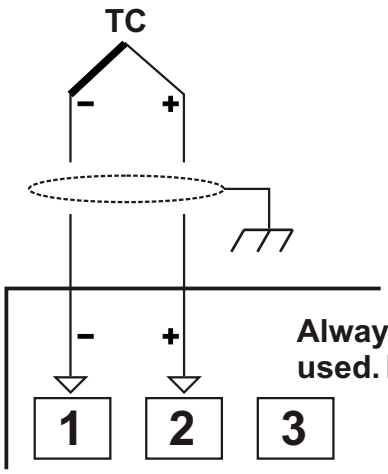

Connect the wires with the polarity as shown in the figure at left.

Always use compensation wire corresponding to the thermocouple used. If present, the shield must be connected to a proper ground.

Always use compensation wire corresponding to the thermocouple used. If present, the shield must be connected to a proper ground.

Input resistance is greater than 10M

3.5.2 RTD Connection

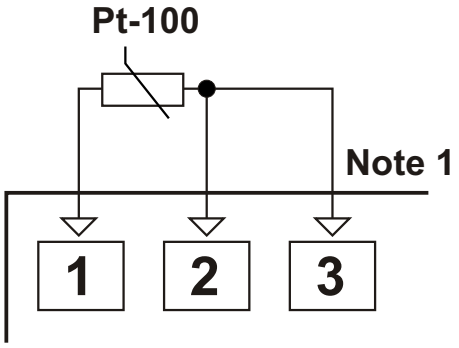

3-wire Pt-100 connection
(with line compensation)
(Max. Line impedance is 10)

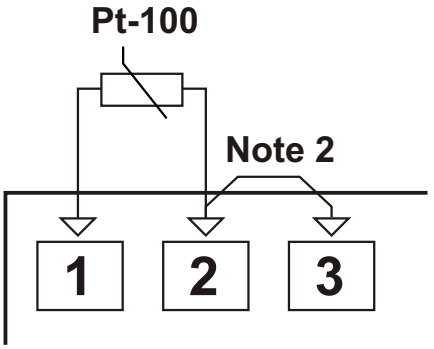

2-wire Pt-100 connection
(without line compensation)

Note 1 : In 3-wire system, use always cables of the same diameter (min 1mm²) Always use wires of the same gauge and type whether a 2-wire or 3-wire system.
Note 2 : Install a jumper between terminals 2 and 3 when using a 2-wire RTD.
Note 3 : If the distance is longer than 10 meters, use 3-wire system

Input resistance is greater than 10M

3.5.3 Connection of Serial Transmitters With Current Output (Loop Powered) to the Process Input

Transmitter connection by using supply voltage on the device

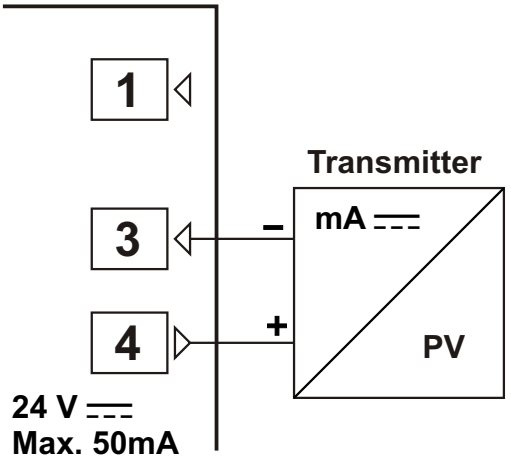

Transmitter connection by using external supply voltage source.

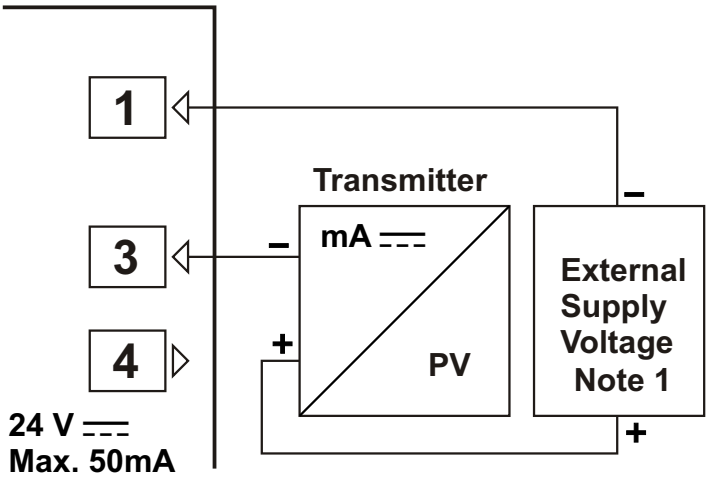

Note 1 : External power supply must be selected according to supply voltage range and required current for transmitter.

Input resistance is 2R7 .

3.5.4 Connection of 3-wire Transmitters with Current Output to the Process Input

Transmitter connection by using supply voltage on the device

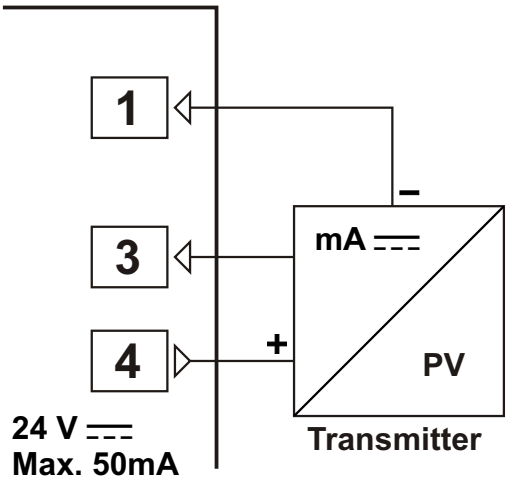

Transmitter connection by using external supply voltage source.

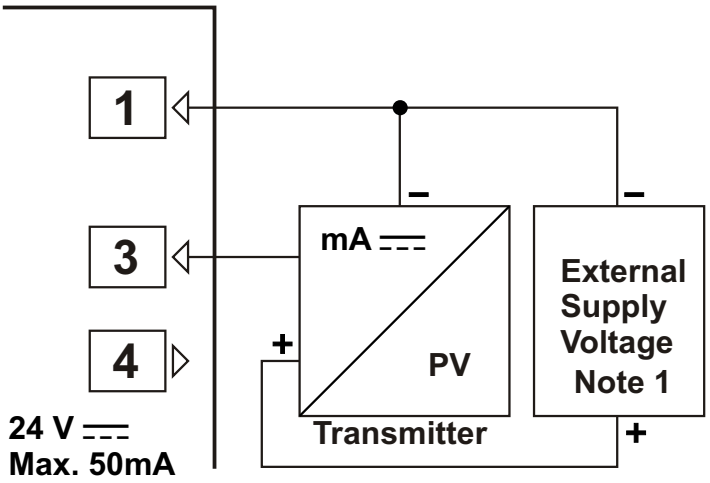

Note-1 : External power supply must be selected according to supply voltage range and required current for transmitter.

Input resistance is 2R7 .

3.5.5 Connection of Transmitters with Voltage Output to the Process Input

Transmitter connection by using supply voltage on the device

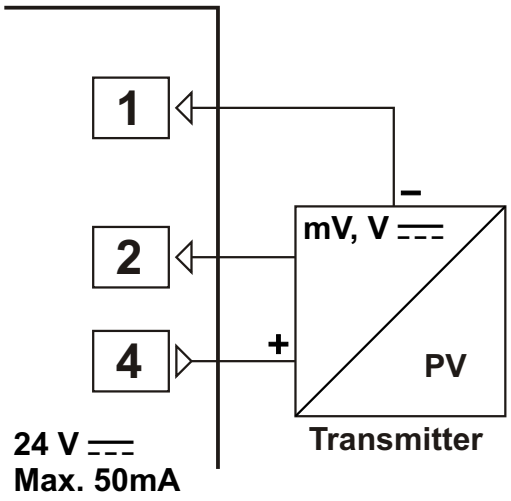

Transmitter connection by using external supply voltage source.

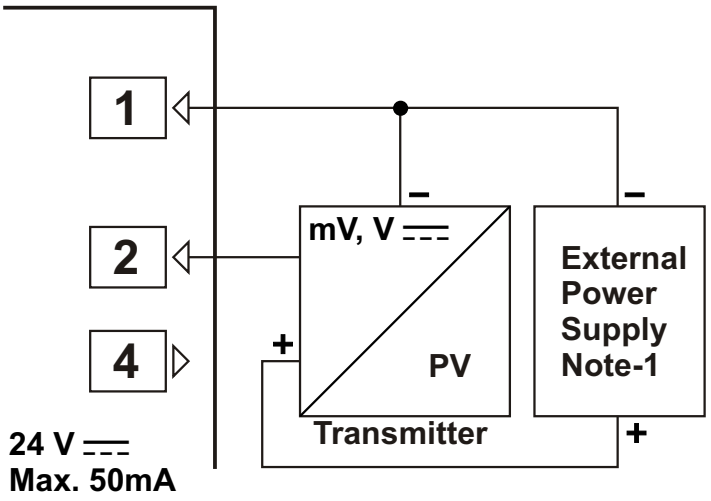

Note-1 : External power supply must be selected according to supply voltage range and required current for transmitter.

Input resistance is greater than 10M for 0...50mV ⎓
Input resistance is 43K for 0...10V ⎓

3.6 Galvanic Isolation Test Values of ESM-7730 Process Controller

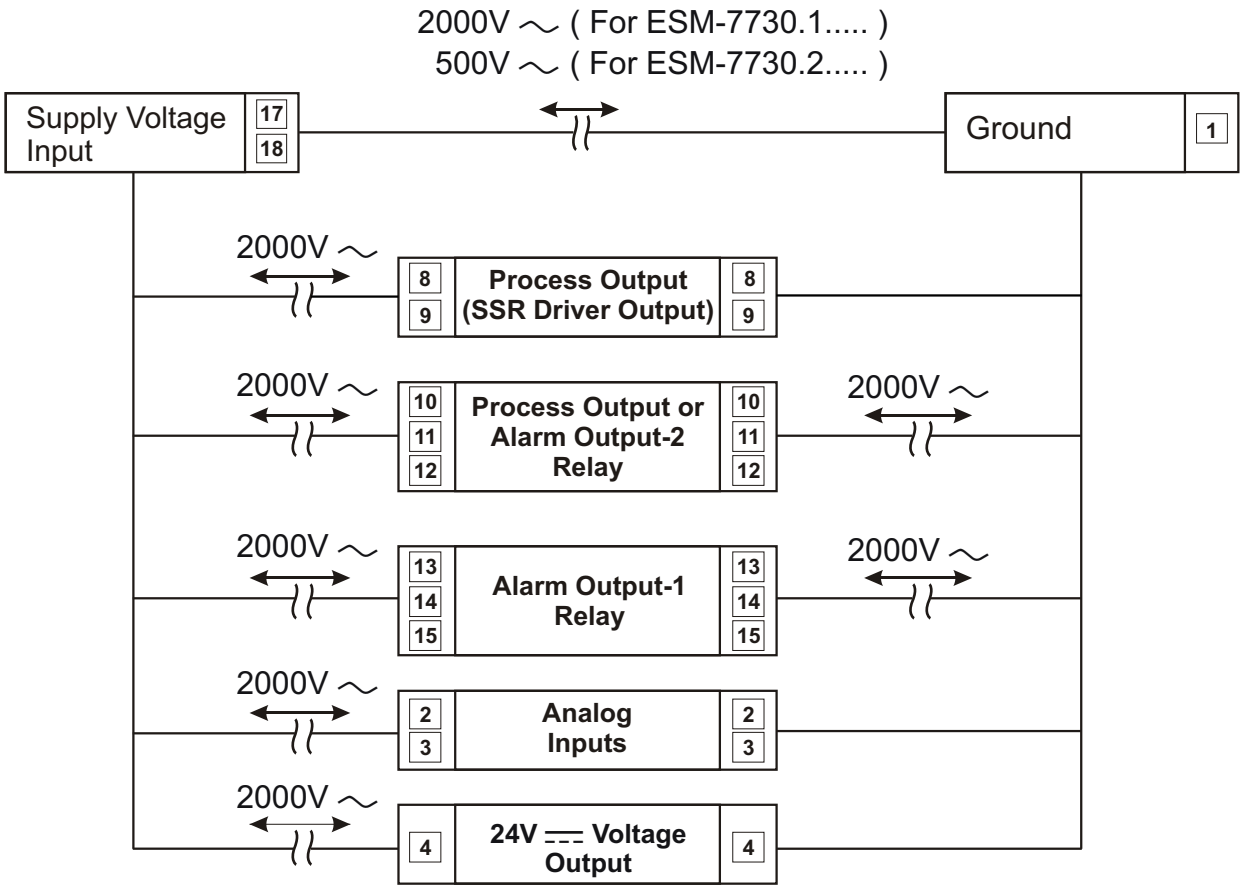

4. Output Connection Forms in ESM-7730 Process Controllers

4.1 Process Output (SSR Driver Output) Connection

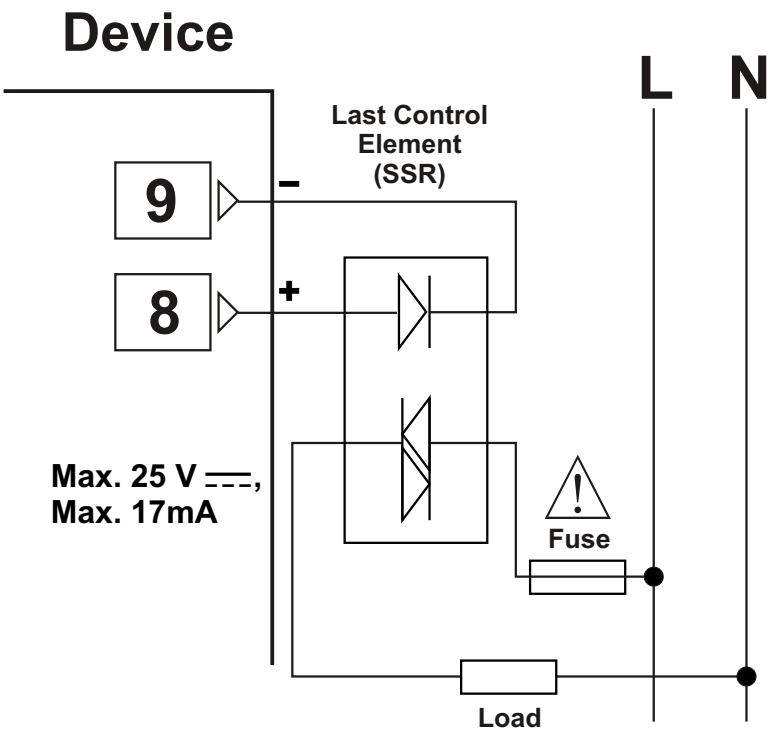

Fuses must be selected according to the applications.

4.2 Alarm Output-1 Relay Connection

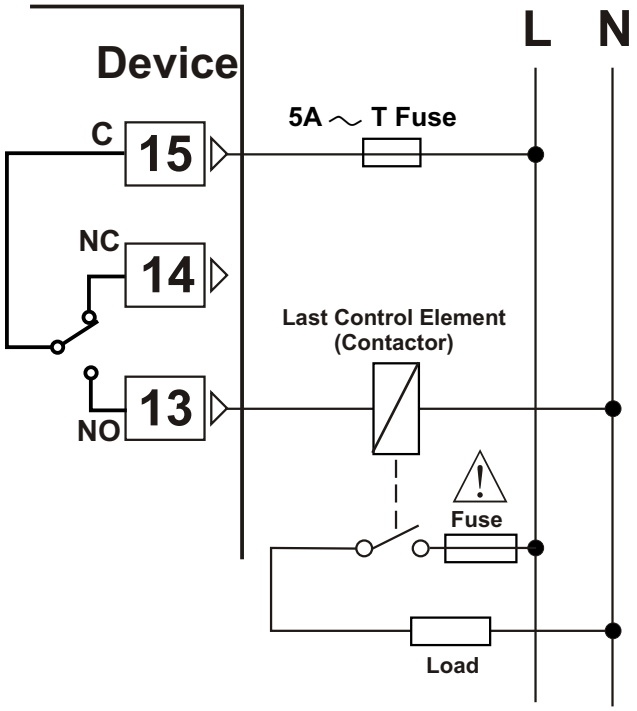

Fuses must be selected according to the applications.

4.3 Process Output or Alarm Output-2 Relay Connection

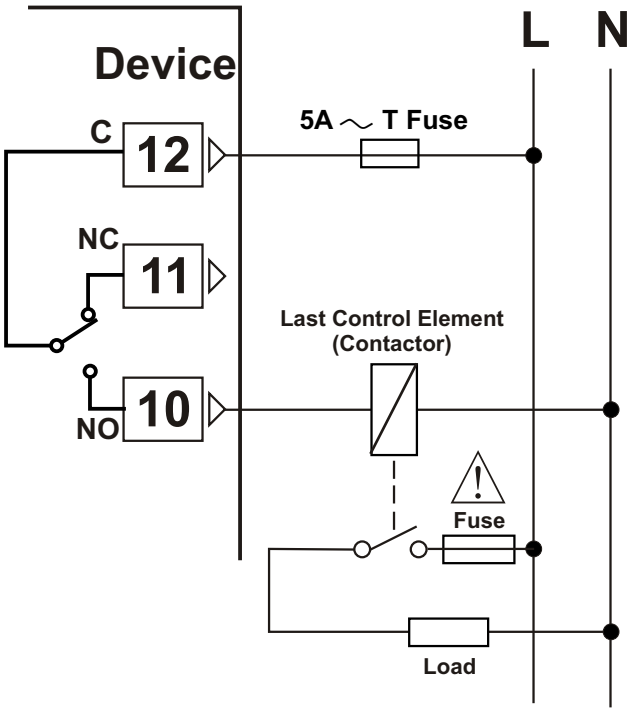

Fuses must be selected according to the applications.

5. Definition of Front Panel and Accessing to the Menus

5.1 Front Panel Definition

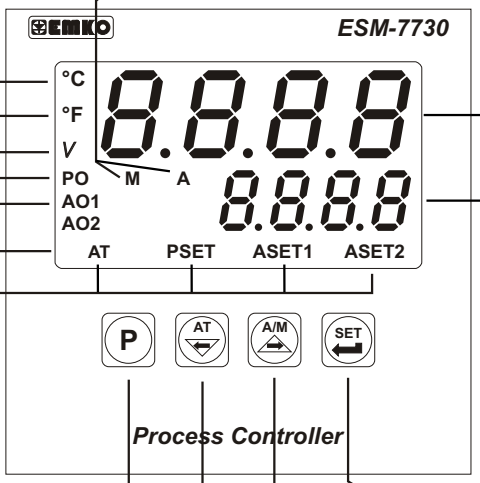

LED indication of °C:Centigrade Unit

LED indication of °F Fahrenheit Unit

LED indication of units other than °C and °F

LED indication of Process status

LED indication of Output-1 status

LED indication of Output-2 status

Led indication of Automatic Operation (For Process Output)

Led indication of Manual Operation (For Process Output)

Display for Process Value (PV) and Parameters

Display for Process Set Value (SV) and Parameter

For details refer to Section 6.1 (Process and Alarm Set Parameters) and Section 6.2.2 (Function Selection For Top and Bottom Display)

Led indication of AT , Autotune is active, PSET , Process set value ASET1 , Alarm-1 set value ASET2 , Alarm-2 set value

Menu button This button is used to access to the all menus and to move up to another menu in the menu list

Note-1

This button is used to decrease the parameter value and access to the program menus. Also it is AT (Auto Tune Yes/No) button. For details on AtEn parameter, refer to Section 6.2.1

Note-1

This button is used to increase the parameter value and access to the program menus. Also it is Automatic or Manual Operation Form Selection button

This button is used to access to the process and alarm set values and it is used to save the program parameters

Note-1: If increment or decrement button is pressed for 5 seconds continuously, increment and decrement number become 10, if increment or decrement button is pressed for 10 seconds continuously, increment and decrement number become 100.

5.2 Observation of Software Revision on the Bottom Display When Power in On

When the power is applied to the device all led indicators and display segments are momentarily illuminated for testing. Software revision number of the controller is momentarily illuminated on the bottom display.

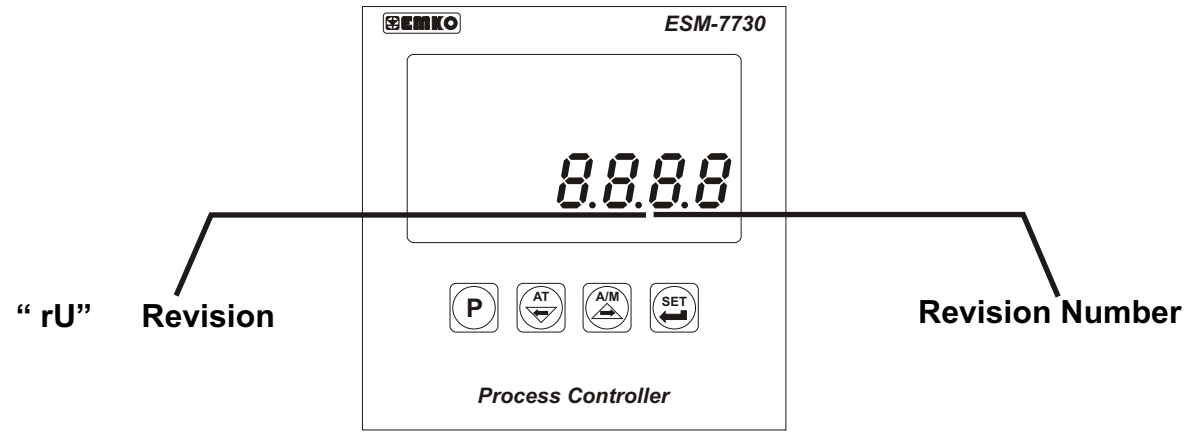

When power is on, display of the device is like below:

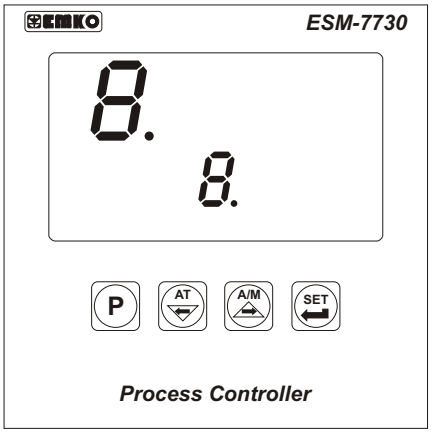

First segments of top and bottom displays are tested

Second segments of top and bottom displays are tested.

Third segments of top and bottom displays are tested.

Fourth segments of top and bottom displays are tested.

All leds are energised. On bottom display revision number is shown. Revision number is "07".

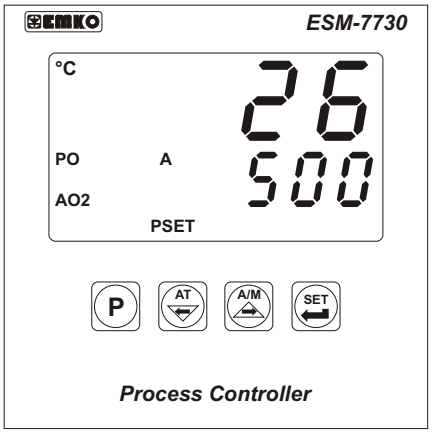

Main operation screen is shown

If there is an unexpected situation while opening the device, power off the device and inform a qualified personnel.

5.3 Adjustment of Process and Alarm SET Values

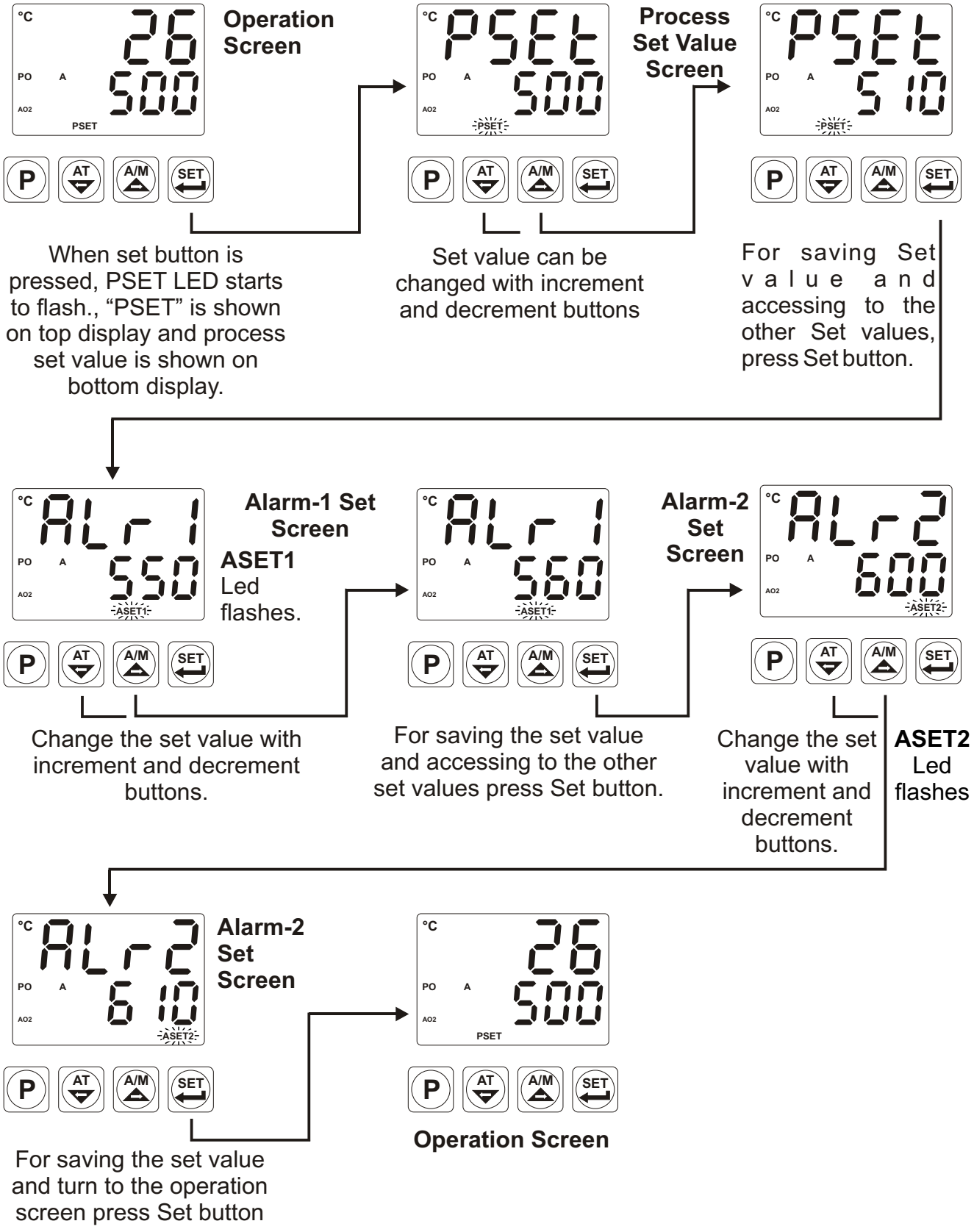

If oCnF parameter in PCnF menu is 0, ALr2 parameter is accessible. If it is 1, this parameter is not accessible and device turns to main operation screen.

For exiting without saving Set value, press menu ("P") button.

5.4 Easy Access Diagram For Program Parameters

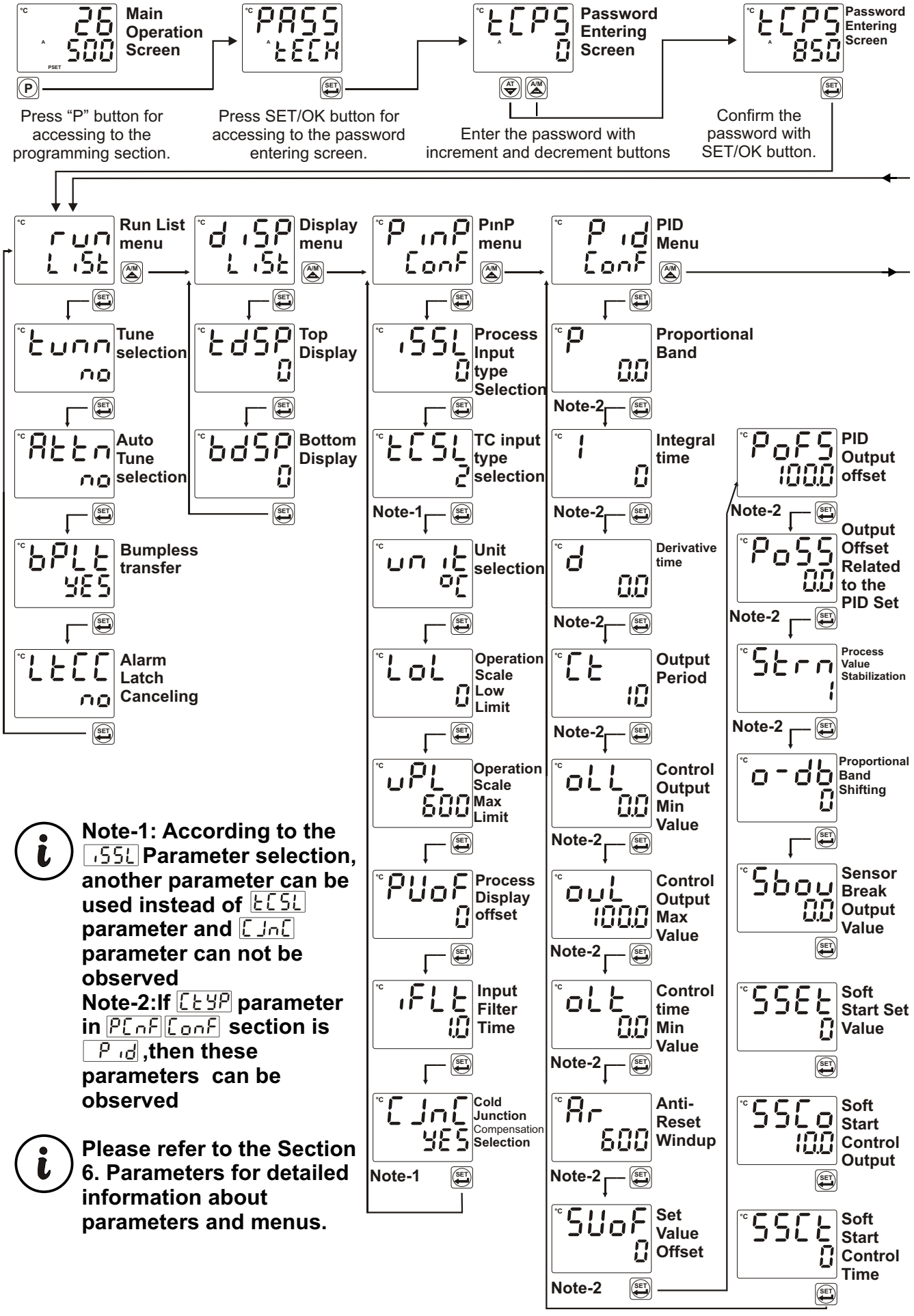

Note-1: According to the iSSL Parameter selection, another parameter can be used instead of tCSL parameter and CJnC parameter can not be observed
Note-2:If CtYP parameter in PCnF ConF section is Pid ,then these parameters can be observed

Please refer to the Section 6. Parameters for detailed information about parameters and menus.

5.4 Easy Access Diagram For Program Parameters

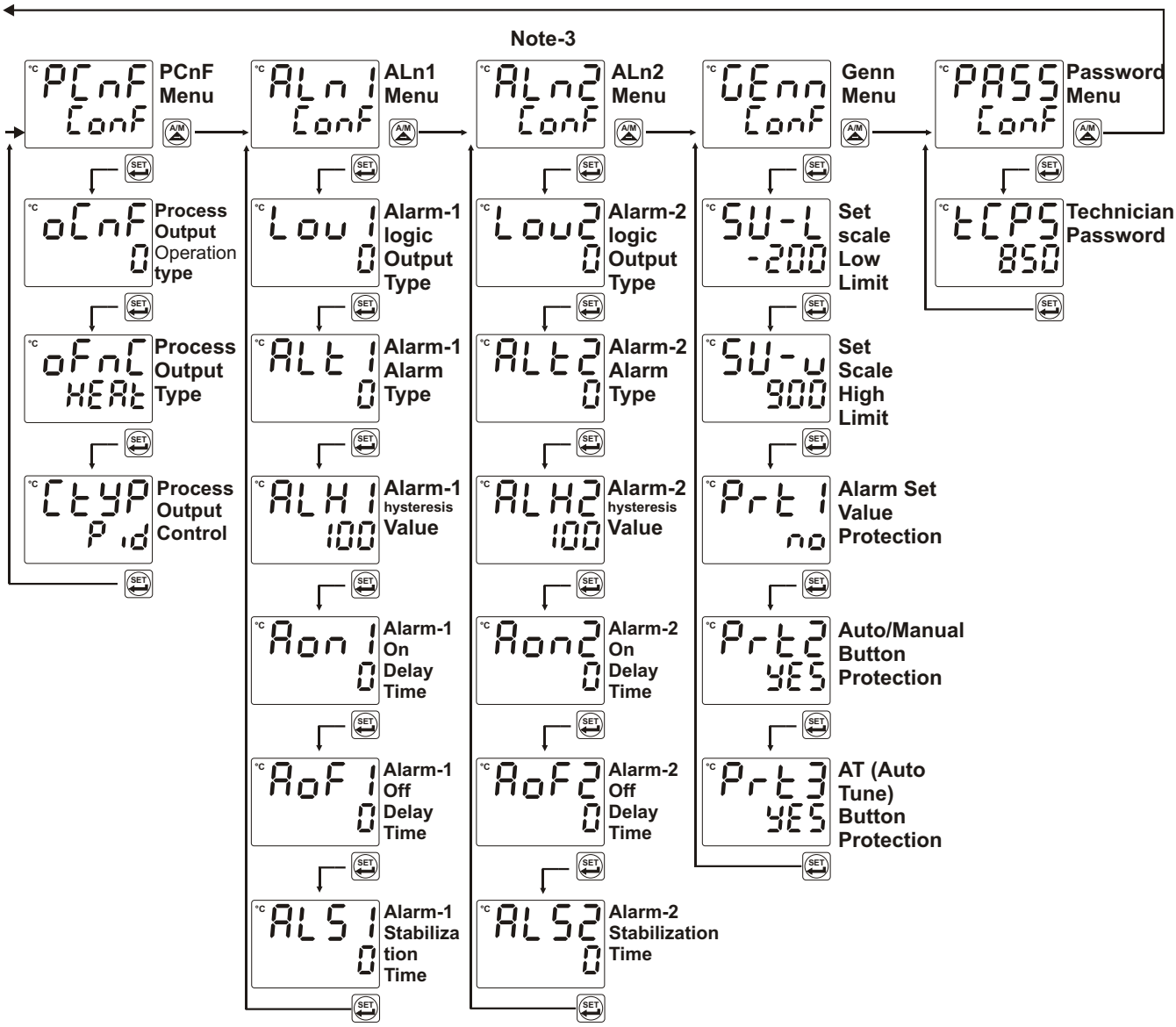

Note-3:This menu can be observed if oCnF parameter in PCnF ConF section is selected 0

Please refer to the Section 6.Parameters for detailed information about Parameters and menus.

5.5 Accessing to the Technician Menu

The parameters have been divided into groups according to their functions. Every group has a title and firstly user must determine the title (menu) for accessing to the parameters. Refer to the parameters section for detailed information about parameters.

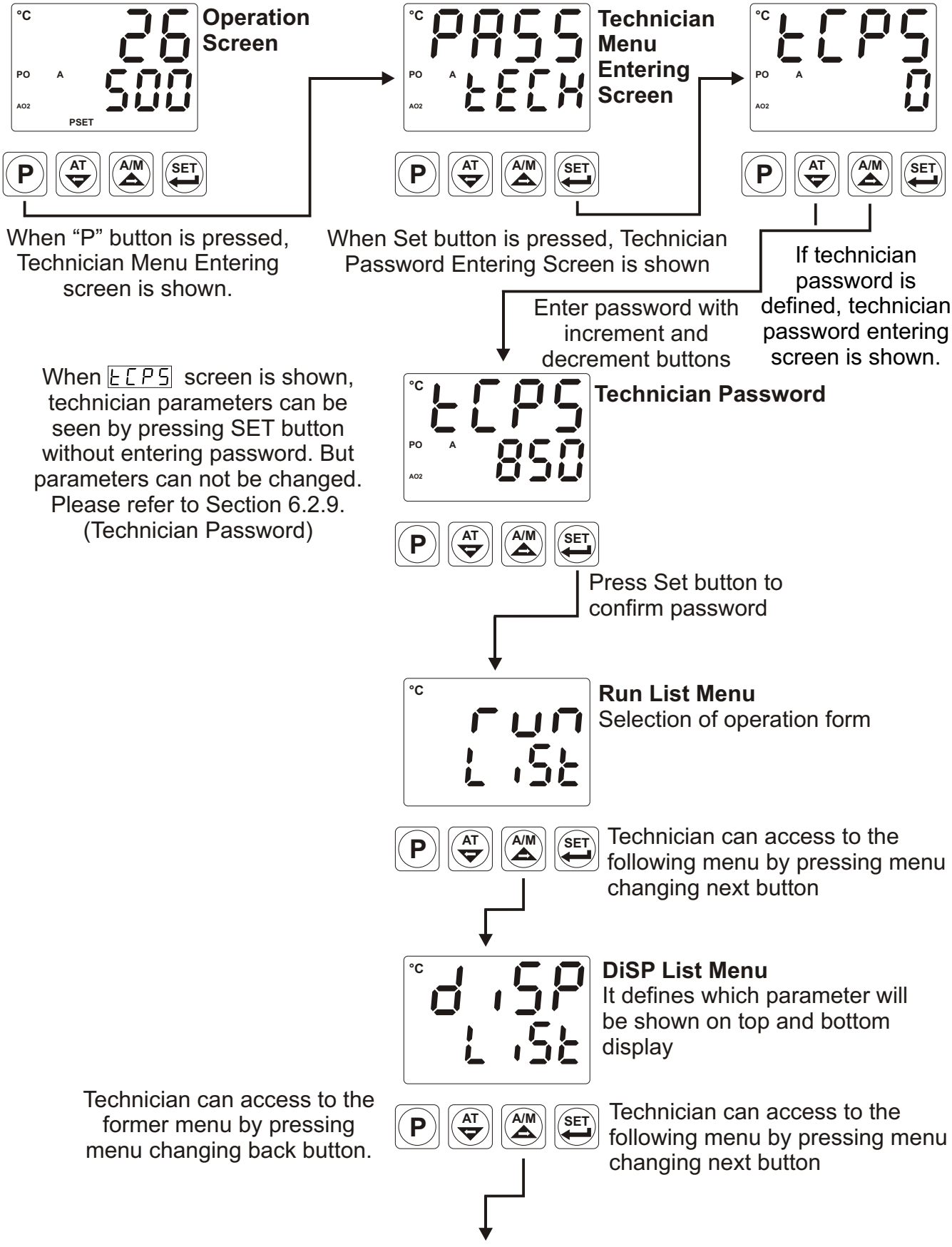

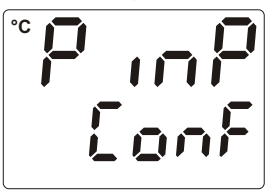

PINP CONF Menu
Configuration parameters of process input

Technician can access to the former menu by pressing menu changing back button.

Technician can access to the following menu by pressing menu changing next button

PID CONF Menu
PID algorithm parameters

Technician can access to the former menu by pressing menu changing back button.

Technician can access to the following menu by pressing menu changing next button

PCnF CONF Menu
Configuration parameters of Process outputs

Technician can access to the former menu by pressing menu changing back button.

Technician can access to the following menu by pressing menu changing next button

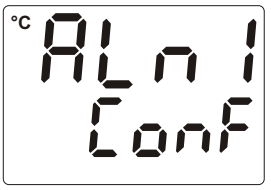

ALn1 CONF Menu
Configuration parameters of ALARM -1 output

Technician can access to the former menu by pressing menu changing back button.

Technician can access to the following menu by pressing menu changing next button

ALn2 CONF Menu
Configuration parameters of ALARM -2 Output

This parameter is accessible if oCnF parameter in PCnF menu is 0

Technician can access to the former menu by pressing menu changing back button.

Technician can access to the following menu by pressing menu changing next button

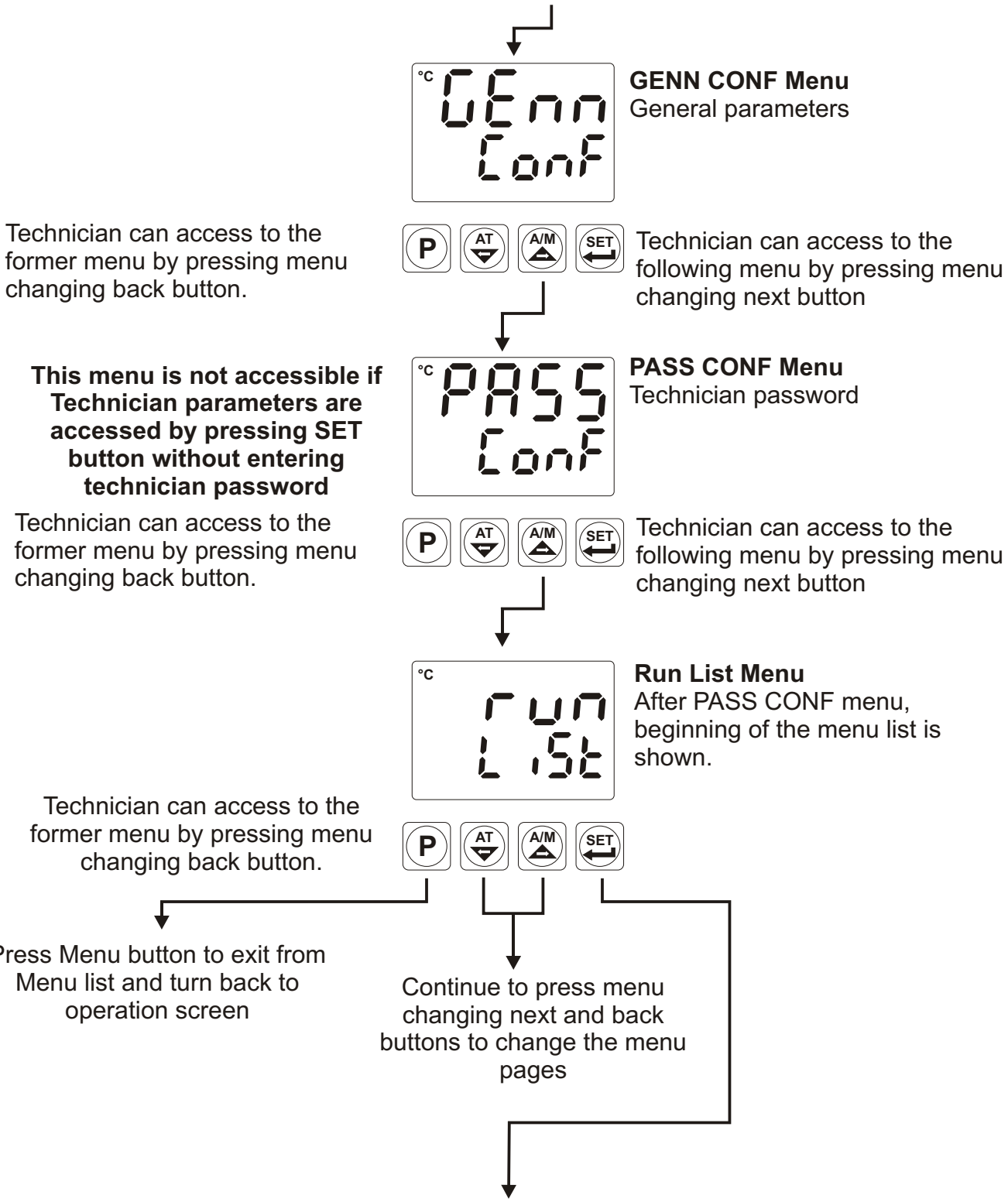

By pressing SET button, technician can access to the menu page and to all parameters in this menu page.

5.6 Changing and Saving Parameters

Example-1 : To change Process Input Type parameter [ISSL]

Process Input Type parameter [ISSL] is in **"**PınP Conf" menu, so PınP ConF menu must be accessed firstly in order to reach [ISSL] parameter.

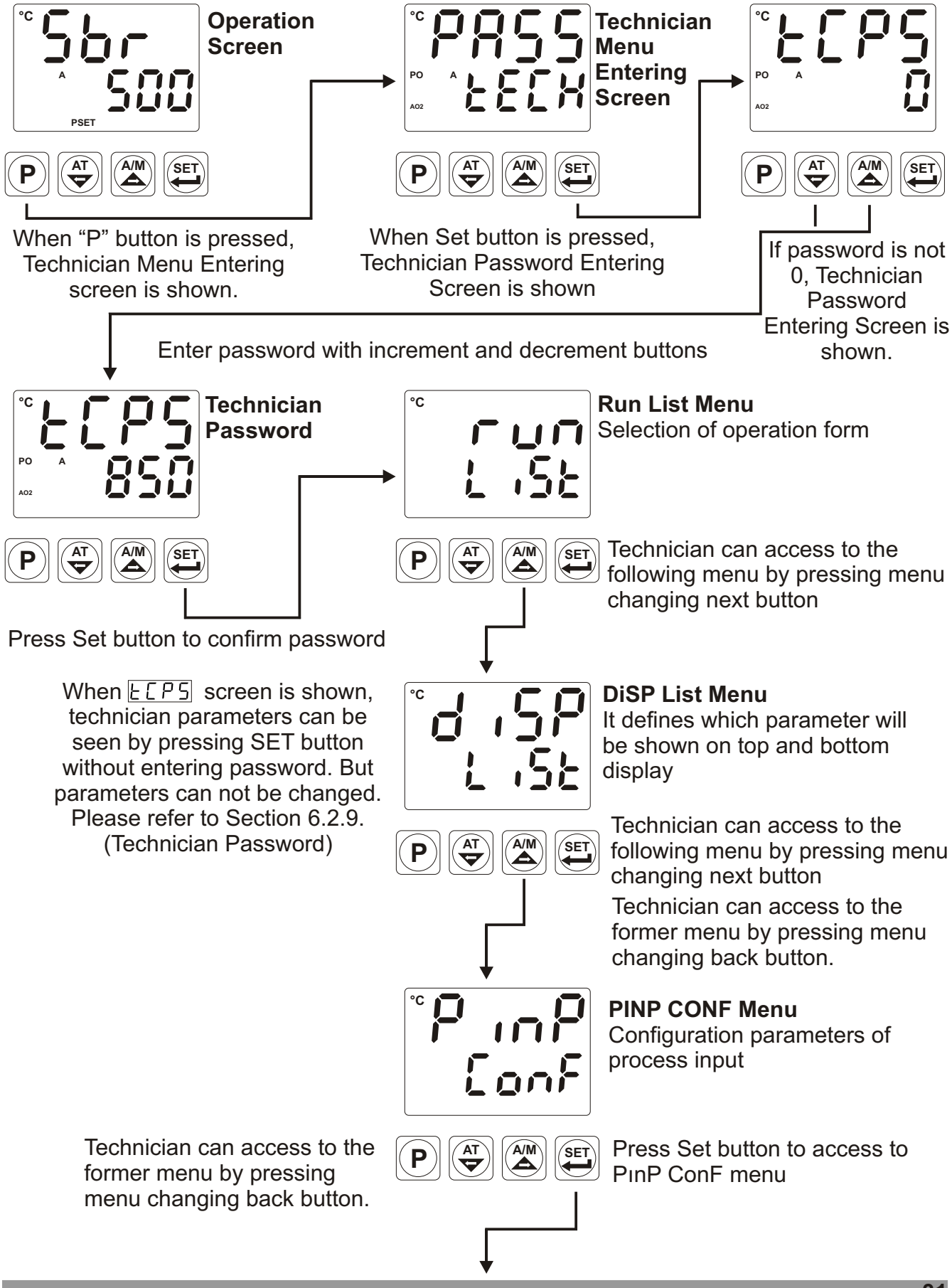

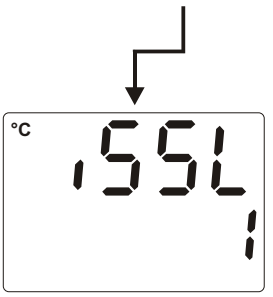

Process Input Type Selection
ISSL is 0001 means, input type is RTD.

Parameter can be changed with increment and decrement buttons

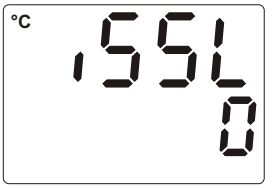

Process Input Type Selection
TC input type is selected

Press Set button to confirm the value and access to the next parameter.

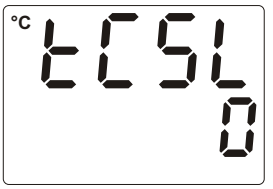

TC Input Type Selection

PINP CONF Menu
When Menu button is pressed, technician can access to the menu pages.

Press Set button to access to the next parameter

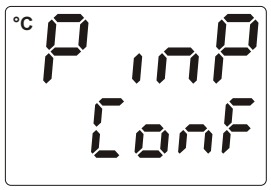

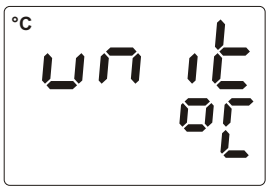

For accessing to the other menus, press menu changing next and back buttons.

Unit Selection

Press Menu button for turning to the operation screen

Operation Screen

Example-2 : Changing operation form from **"Auto"** to **"Manual"** and adjustment of % output.
If operation form is **Auto (Close-Loop Control)** and there is an output with PID or ON/OFF control form, device controls the process outputs by calculating the % output values automaticaly.
If operation form is **Manual (Open-Loop Control)** and there is an output with PID control form, then % output value can be adjusted with increment and decrement buttons.
If operation form is **Manual (Open-Loop Control),** and there is an output with ON/OFF control form, then %output value can be adjusted "OFF", "HEAT" or "COOL" with decrement and increment buttons.
If operation form is Manual, % output value is shown on bottom display whatever bdSP parameter is.

Auto/Manual Operation Form can be adjusted Auto or Manual with A/M button from front panel. For using this button, Auto/Manual Operation Type Selection Parameter Prt2 must be no .
For details on this parameter, refer to Section 6.2.8 General Parameters.

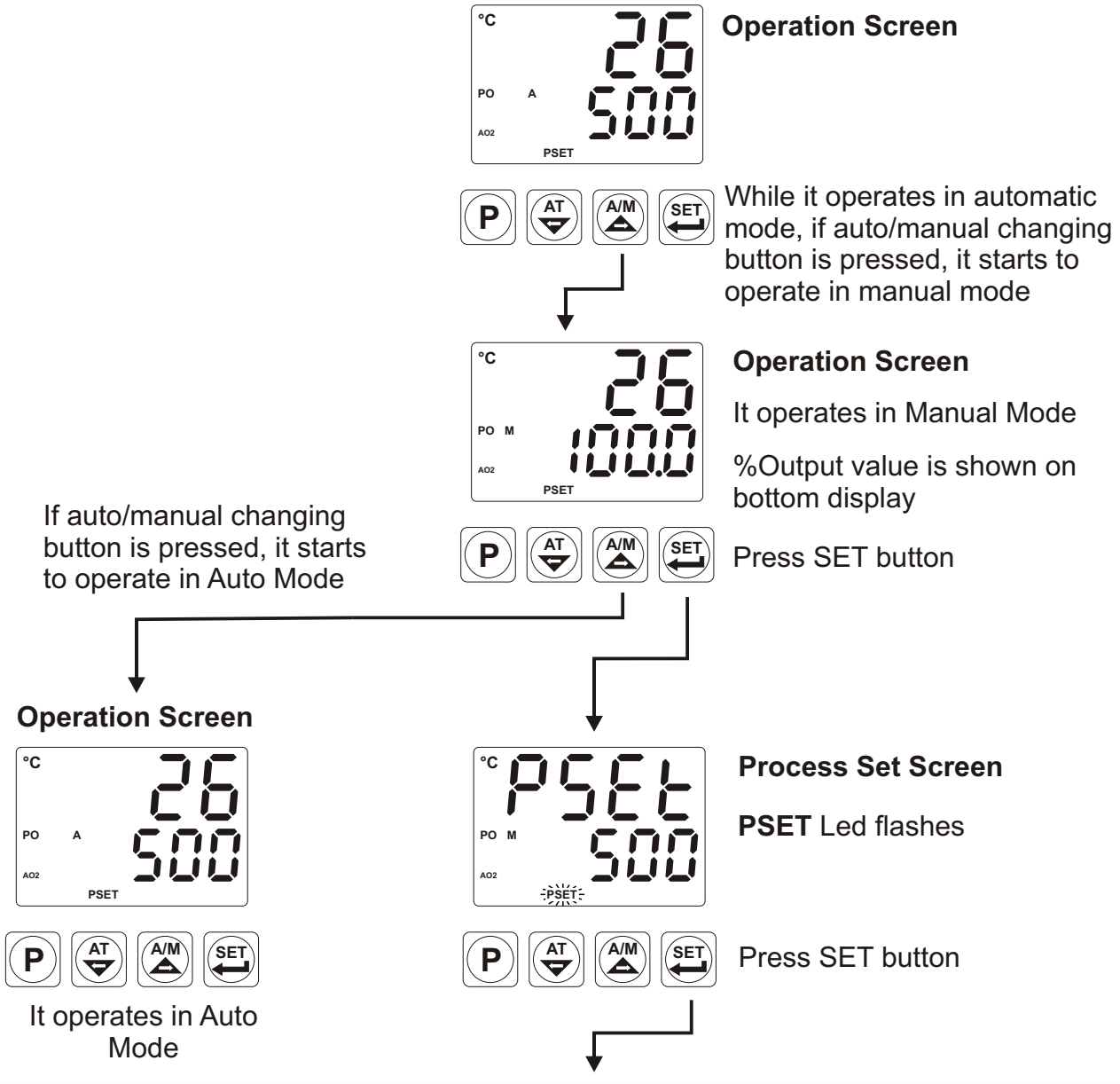

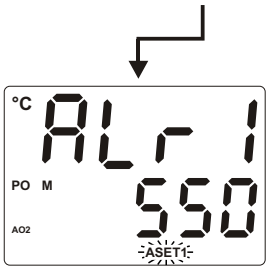

Alarm-1 Set Screen

ASET1 Led flashes

Press SET button

ASET2 Led flashes

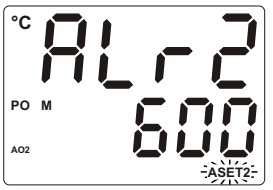

Alarm-2 Set Screen

This parameter is accessible if oCnF parameter in PCnF menu is 0 . It is not accessible if oCnF Parameter is 1

Press SET button

Manual Led flashes

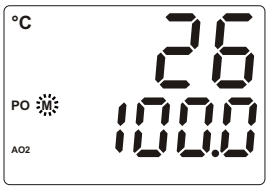

Operation Screen

%Output value can be changed with increment and decrement buttons.

Operation Screen

Press Set button to confirm the value and turn to operation screen

Manual Led stops flashing

Operation Screen

Example-3 : To change proportional band parameter P

Proportional band parameter P is in "Pid Conf" menu, so "Pid Conf" menu must be accessed firstly.

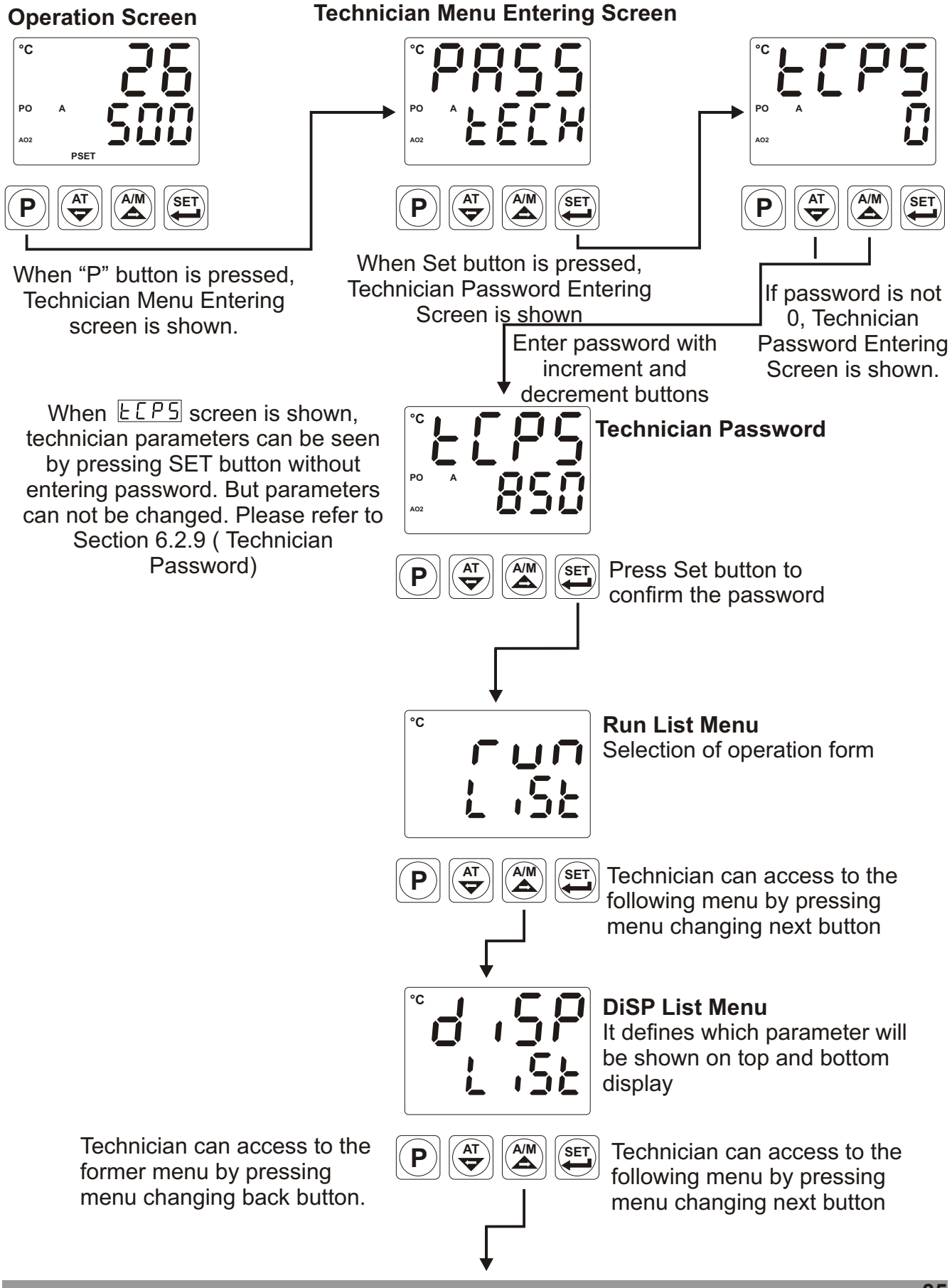

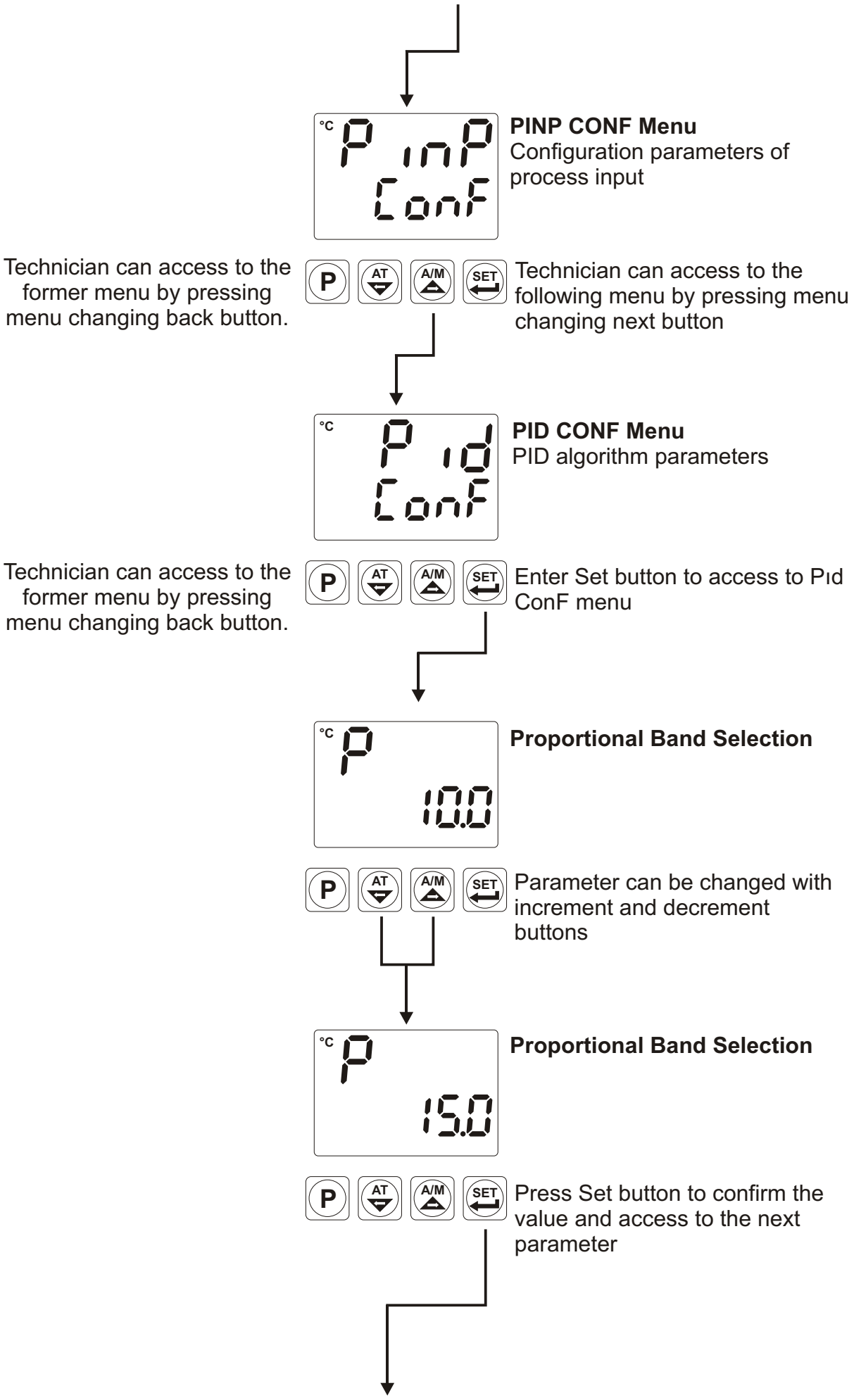
°C
PinP
ConF
PINP CONF Menu
Configuration parameters of process input
Technician can access to the former menu by pressing menu changing back button.
P
AT
A/M
SET
Technician can access to the following menu by pressing menu changing next button
°C
Pid
ConF
PID CONF Menu
PID algorithm parameters
Technician can access to the former menu by pressing menu changing back button.
Enter Set button to access to Pid ConF menu
°C
P
10.0
Proportional Band Selection
Parameter can be changed with increment and decrement buttons
°C
P
15.0
Proportional Band Selection
Press Set button to confirm the value and access to the next parameter

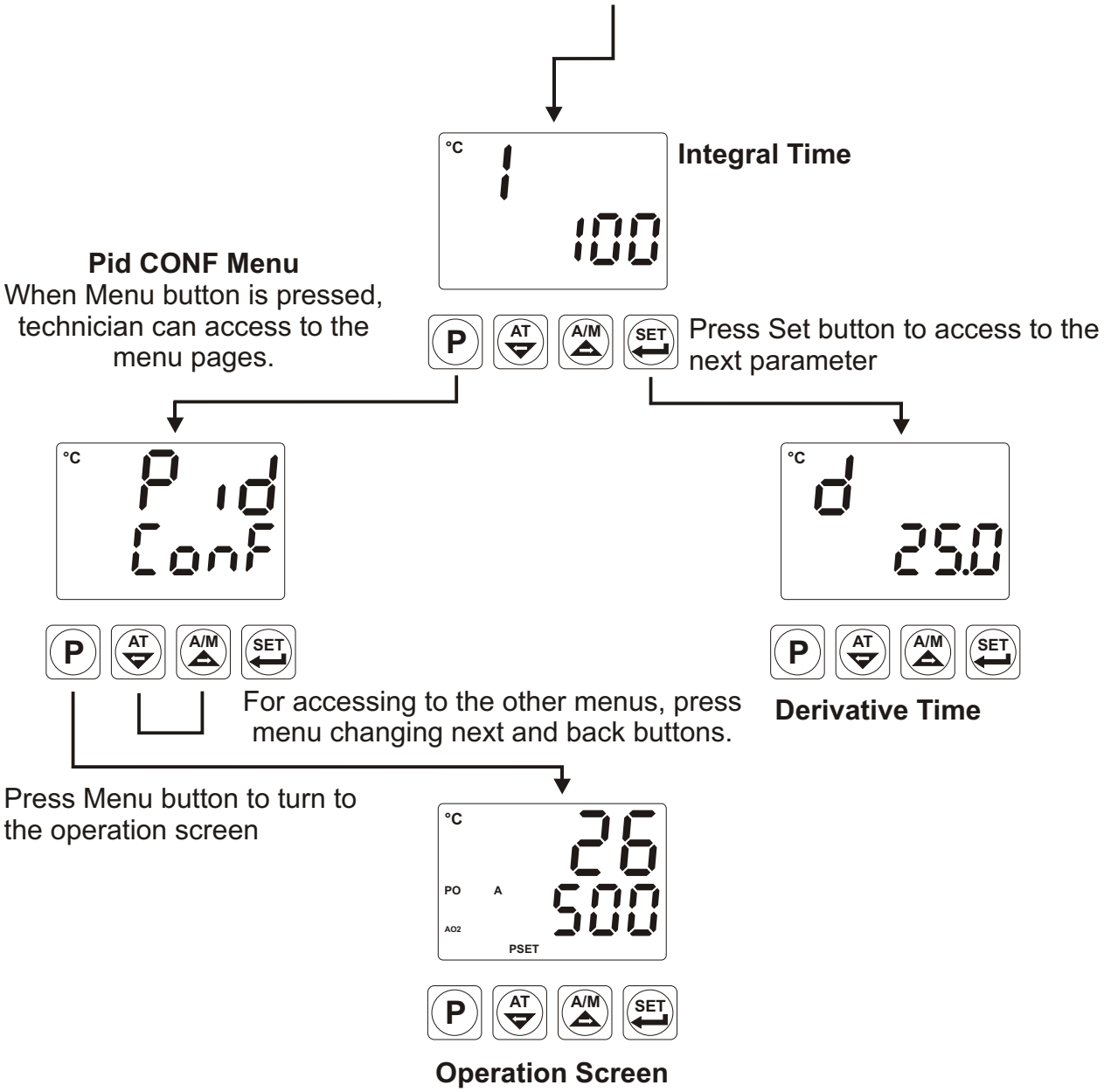
°C
1
100
Integral Time
Pid CONF Menu
When Menu button is pressed, technician can access to the menu pages.
P
AT
A/M
SET
Press Set button to access to the next parameter
°C
Pid
ConF
°C
d
25.0
P
AT
A/M
SET
P
AT
A/M
SET
Derivative Time
For accessing to the other menus, press menu changing next and back buttons.
Press Menu button to turn to the operation screen
°C
26
PO
A
500
AO2
PSET
P
AT
A/M
SET
Operation Screen

Example-4 : To change ⎓Voltage / Current Input Calibration Type Selection parameter uCAL In "PınP Conf" menu

uCAL Parameter is in "PınP ConF" menu. For accessing to this parameter, technician must access to "PınP ConF" menu firstly. In this example, changing input type of a device from thermocouple to ⎓Voltage / Current and dual point calibration selection is shown.

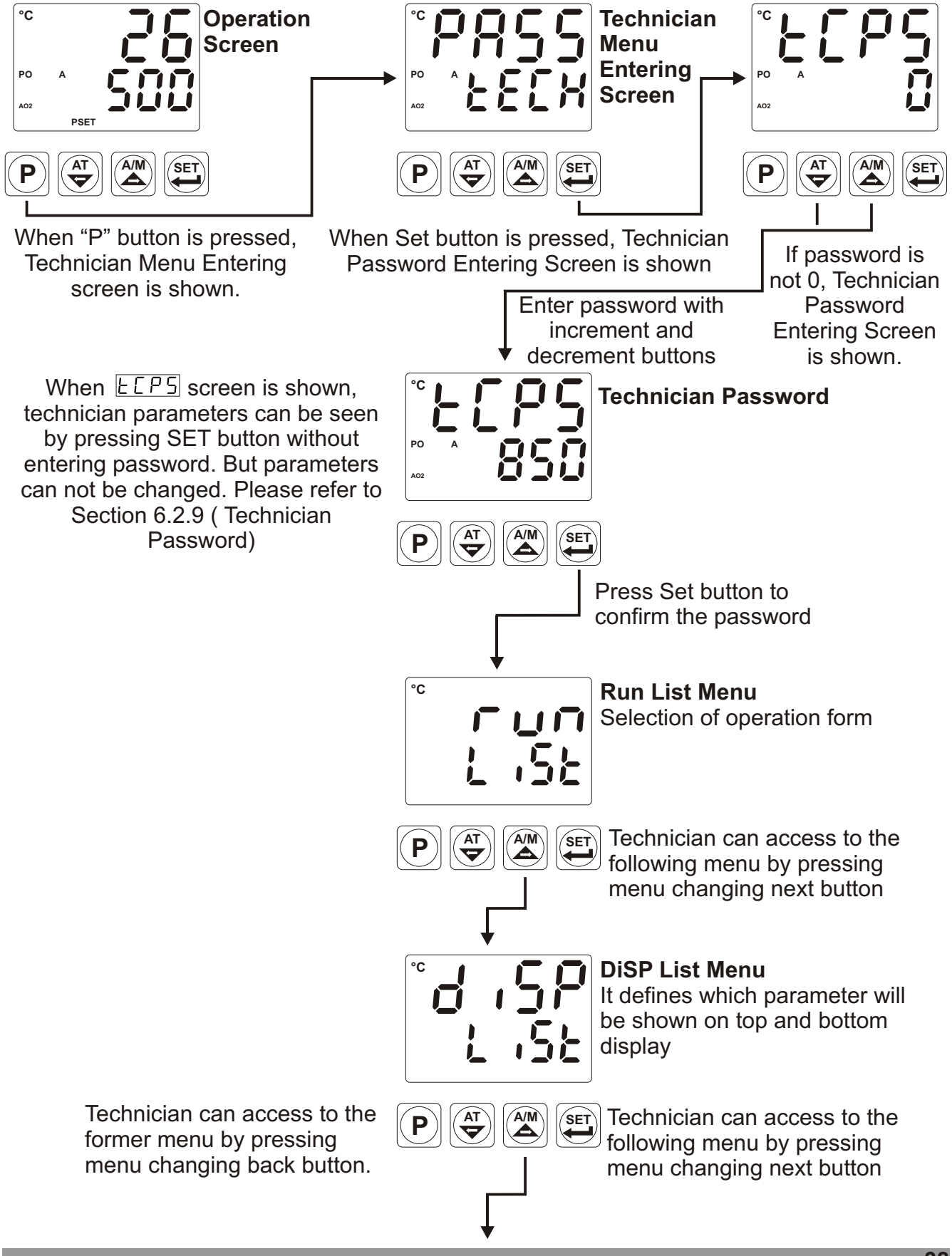

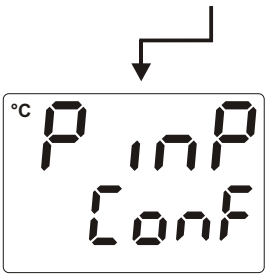

PINP CONF Menu
Configuration parameters of process input

Technician can access to the former menu by pressing menu changing back button.

Enter PınP ConF menu by pressing Set button

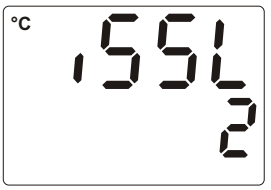

Process Input Type Selection
For accessing to uCAL parameter, iSSL parameter must be 2 .If it is not 2 ,change the value as 2 With increment button.

Press Set button to confirm the value and access to the next parameter

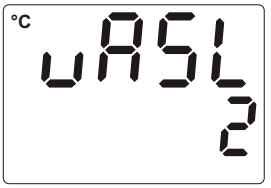

⎓Voltage / Current Input Type Selection

Press Set button to access to the next parameter

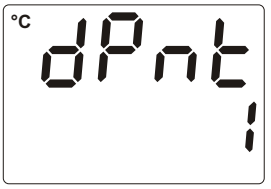

Decimal Point Position

Press Set button to access to the next parameter

⎓Voltage / Current Input Calibration Type Selection

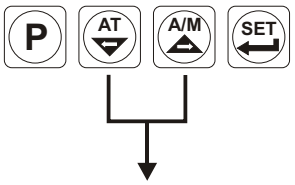

Parameter can be changed with increment and decrement buttons

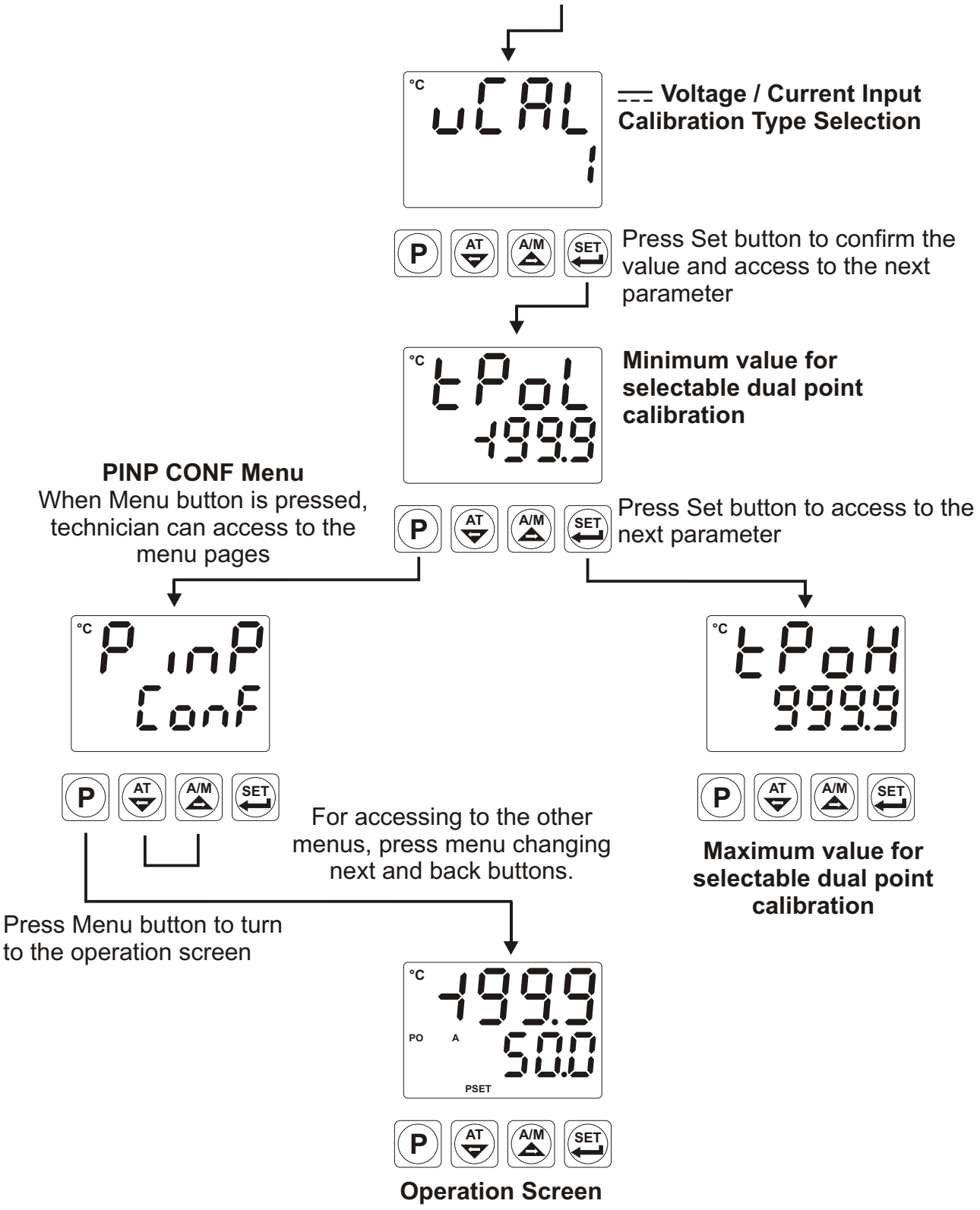
°C
uCAL
1
⎓ Voltage / Current Input Calibration Type Selection
P
AT
A/M
SET
Press Set button to confirm the value and access to the next parameter
°C
tPoL
-199.9
Minimum value for selectable dual point calibration
PINP CONF Menu
When Menu button is pressed, technician can access to the menu pages
Press Set button to access to the next parameter
°C
PinP
ConF
°C
tPoH
999.9
For accessing to the other menus, press menu changing next and back buttons.
Maximum value for selectable dual point calibration
Press Menu button to turn to the operation screen
°C
-199.9
PO
A
50.0
PSET
Operation Screen

6. Parameters

Parameters are divided into two groups. They are Process / Alarm Set parameters and Technician parameters. Technician parameters are grouped into subgroups according to their functions. The subgroups are named as menu pages.

6.1 Process / Alarm SET Parameters

PSEt Process set value

PSEt Process set value can be adjusted from minimum value of set scale SU-L to maximum value of set scale SU-u

ALr 1 Set value for alarm output-1

ALr 1 Process set value can be adjusted from minimum value of set scale SU-L to maximum value of set scale SU-u

ALr2 Set value for alarm output-2.It is accessible if oCnF parameter is 0

ALr2 Process set value can be adjusted from minimum value of set scale SU-L to maximum value of set scale SU-u

For changing Alarm Output-1 and Alarm Output-2 Set values, Alarm Set Values protection parameter PrT1 must be no

run / LiSt

6.2.1 Selection of PID Tune and Operation Form

tunn **TUNE SELECTION**

By selecting one of the methods below, device can determine the PID parameters.

no Device operates according to the defined PID parameters

Atun **Auto tune** (Limit Cycle Tuning) operation

Stun **Self tune** (Step Response Tuning) operation

At.St **Auto-Self Tune**

Self Tune operation is performed, if the conditions are realized when power on firstly. In normal operation, it controls the tune conditions in **Auto Tune** selection which explained below. If any of the conditions is realized, it performs the **Auto Tune** operation.

AtTn **AUTOMATIC TUNE SELECTION**

no Device does not do Atun (Limit Cycle Tuning) operation or while Atun operation runs, this selection is adjusted no and **Auto Tune** operation is canceled.

YES If tunn parameter is Atun or At.St , when the conditions for Auto Tune parameter that are explained in Tune Methods section are realized, it starts to perform Auto Tune (Limit Cycle Tuning) operation.

By pressing AT button, Automatic Tune can be selected YES or no
For being able to use AT button, AT (Auto Tune) Button protection parameter PrT3 Must be no . (For details, refer to Section 6.2.8 General Parameters)

TUNE METHODS

There are 2 different methods for determining PID parameters by the device. These are **Auto tune** (Limit Cycle Tuning) and **Self Tune** (Step Response Tuning) methods.

Determining of PID parameters with **Auto Tune** is started in these conditions :
1- By the user in any time,
2- By the device when system gets unstable and starts oscillation
If process value is out of **Set ± Process value stabilisation** [Strn] value (Please refer to Section 6.2.4) and starts to oscillates, then device changes the [AtEn] Parameter to [YES] and Auto Tune operation is started.

3- After changing set value, if difference between newly defined set value and former set value is greater than proportional band, device will start it.
If set value is changed to a value that is greater than;
± [Scale * (Heating or Cooling Proportional Band)] /1000 value,
[AtEn] Parameter is adjusted [YES] by the device and **Auto Tune** operation is started.

Example -1 : Starting Auto Tune operation by the user ;

- Enter technician menu.
- Adjust tune selection parameter [tunn] in "run List" menu , **Auto Tune** [AtUn] Or **Auto-Self Tune** [At.St]
- Adjust automatic tune selection parameter [AtEn] in "run List" menu [YES] And return to main operation screen.
- Observe that "AT" led is active.

If **Auto Tune** operation finishes without any problem, device saves the PID coefficients to memory and continue to run. [AtEn] Parameter is adjusted [no] automatically.

Canceling **Auto Tune** operation:

1- If sensor breaks ;
2- If **Auto Tune** operation can not be completed in 8 hours
3- If user adjusts [tunn] parameter [no] or [Stun]
4- If user adjusts [AtEn] parameter [no]
5- If process set value is changed while Tune operation is being performed
6- While Tune operation is being performed, if operation type selection is changed as "Manual" when it is "Automatic" (If operation type selection is changed as "Automatic" when it is "Manual", then Tune operation is started again)
7- If output function is changed while Tune operation is being performed (Heat Cool, Cool Heat)
8- While Tune operation is being performed, if control form is changed as "ON/OFF" when it is "PID" (If control form is changed as "PID" when it is "ON/OFF", the Tune operation is started again)

Auto Tune is canceled. Then, without doing any changes in PID parameters and [AtEn] Parameter, device continues to run with former PID parameters.

For Auto Tune (Limit Cycle Tuning) operation :
1- Tune slection parameter [tunn] in "run List" menu must be selected [AtUn] **Auto tune** or [At.St] **Auto-Self tune** .
2 - For being started Tune operation (Auto Tune or Self Tune) control form must be P, PI, PD or PID.
3 - If process set value is changed while Tune operation is being performed, Tune operation is canceled.

Auto Tune (Limit Cycle Tuning) operation ;
if heating or heating-cooling function and PID control form is selected, process control output runs according to heating
if cooling function and PID control form is selected, process control output runs according to cooling .

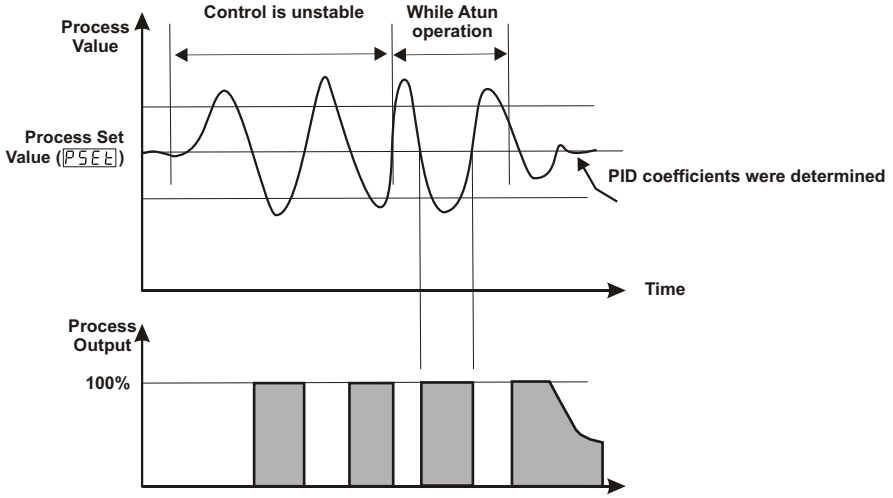

Self Tune (Step Response Tuning) :
When power is on, while process value starts to change for being equal to process set value, PID parameters are determined by the device with **Self Tune** method.

For starting **Self Tune (Step Response Tuning)** operation firstly power off and then apply power to the device. Also difference between process value and set value must be too much.

Example 2 : Determination of PID parameters with Self Tune method

- Enter technician menu
- Select tune selection parameter tunn in “run List” menu Stun or At.St and turn to operation screen.
- Power off the device.
- Wait system to be in first conditions.
  (For example : Decrease of the temperature to ambient temperature while controlling the temperature)
- Apply power to the device
- See that “AT” led is active

If heating or heating-cooling function and PID control form is selected for the system;
If set value is greater than process value, process output becomes active till to the **Temperature+[(Set - Temperature) / 2]** value. When process value reaches to this value, process output reduces to 0% and it calculates the PID coefficients.

For Self Tune (Step Response Tuning) operation :
1 - Tune selection parameter tunn in “run List” menu must be selected **Self tune** Stun Or **Auto-Self Tune** At.St
2 - For **Self Tune (Step Response Tuning)** operation, firstly power off and then apply power to the device.
3 - For being started Tune operation (Auto Tune or Self Tune) control form must be P, PI, PD or PID.
4 - If process set value is changed whileTune operation is being performed, Tune operation is canceled.

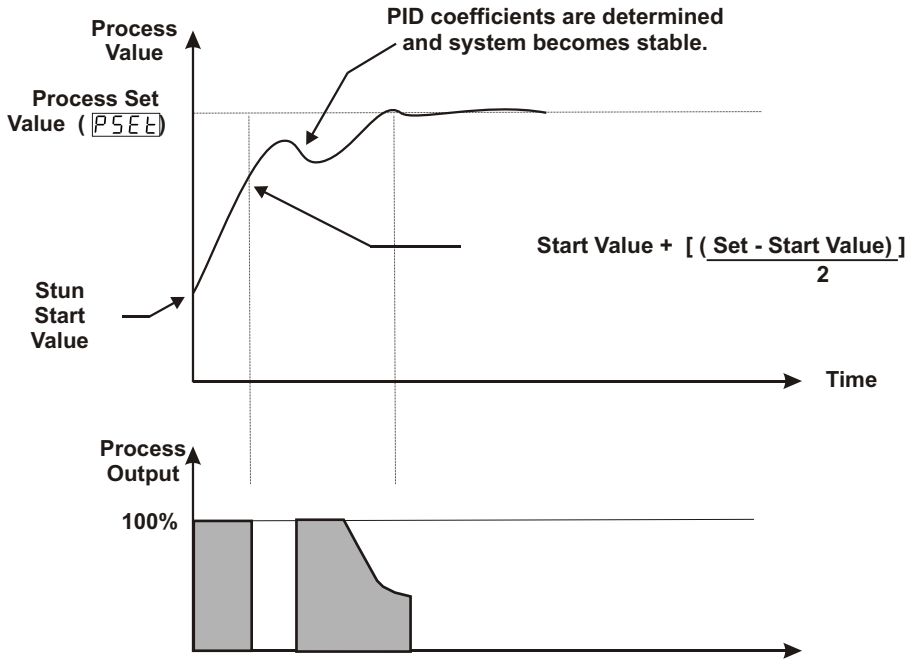

If cooling function and PID control form is selected for the system;
If set value is less than process value, process output becomes active till to the **Temperature - [(Temperature-Set) / 2]** value. When process value reaches to this value, process output is reduced to 0% and it calculates PID coefficients.

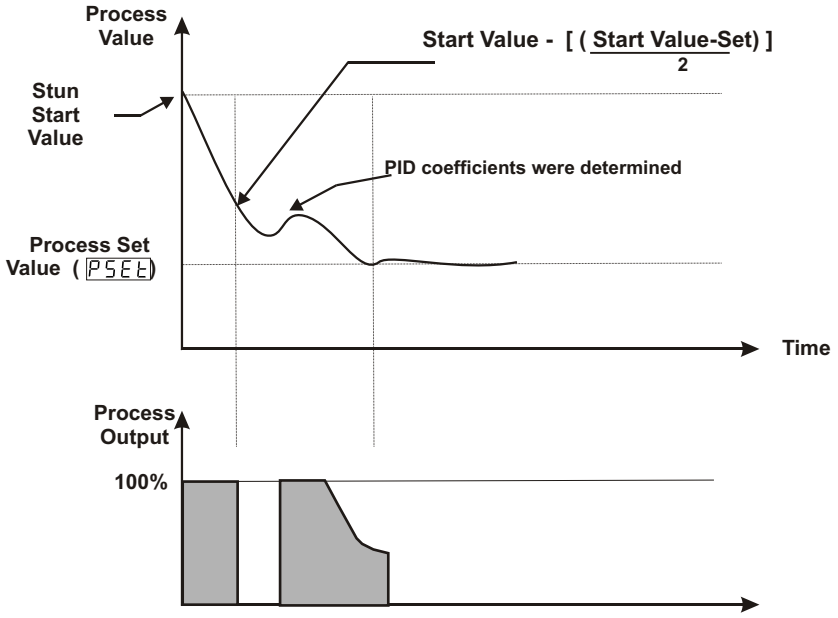

For Self Tune (Step Response Tuning) operation :
1 - Tune selection parameter tunn in "run List" menu must be selected **Self tune** Stun Or **Auto-Self Tune** At.St
2 - For **Self Tune (Step Response Tuning)** operation, firstly power off and then apply power to the device.
3 - For being started Tune operation (Auto Tune or Self Tune) control form must be P, PI, PD or PID.
4 - If process set value is changed whileTune operation is being performed, Tune operation is canceled.

If **Self Tune** operation is finished without any problem, device saves new PID parameters to memory and runs. It changes tunn parameter.
If tunn parameter is Stun it is changed to no , if it is At.St , it is changed to Atun

If **Self Tune** operation is interrupted at half, PID parameters and tunn parameter are not changed, device continues to run with former PID parameters. When power is off and then on, device starts to complete the **Self Tune** operation.

Canceling **Self Tune** operation :

1- If sensor breaks ;
2- If **Self Tune** operation can not be completed in 8 hours ;
3- While heating **Self Tune** operation is running, if process value becomes greater than Set value ;
4- While cooling **Self Tune** operation is running, if process value becomes less than Set value ;
5- If user selects tunn parameter no or Atun
6- If process set value is changed while Tune operation is being performed
7- While Tune operation is being performed, if operation type selection is changed as “Manual” when it is “Automatic”
8- If output function is changed while Tune operation is being performed (Heat Cool, Cool Heat)
9- While Tune operation is being performed, if control form is changed as “ON/OFF” when it is “PID” (If control form is changed as “PID” when it is “ON/OFF”, the Tune operation is started again)

Self Tune operation is canceled. Then device continues to run with former PID parameters without changing PID parameters.

For Self Tune (Step Response Tuning) operation :
1 - Tune selection parameter tunn in “run List” menu must be selected **Self tune** Stun Or **Auto-Self Tune** At.St
2 - For **Self Tune (Step Response Tuning)** operation, firstly power off and then apply power to the device.
3 - For being started Tune operation (Auto Tune or Self Tune) control form must be P, PI, PD or PID.
4 - If process set value is changed while Tune operation is being performed, Tune operation is canceled.

bPLt **BUMPLESS TRANSFER**

no Process output value in manual control is not taken into consideration while passing from manual control to automatic control. New control output that is measured in automatic control is applied to process output.
Last %output value is taken output value of manual control and manual control continues while passing from automatic control to manual control.

YES While passing from manual control to automatic control, last process output value in manual control is accepted as first process output value in automatic control and automatic control continues to run.
Last % process output value in automatic control is accepted as process output value of manual control and manual control continues to run.

LtCC **ALARM LATCH CANCELING**

no Alarm latch canceling is not performed.

YES If there is an alarm output with latching and there is no alarm status, latching operation will be finished by the device. When it is finished, this parameter becomes no Automatically.

diSP
LiSt

6.2.2 Function Selection for Top and Bottom Display

tdSP It defines the function of the top display. This parameter determines which value is shown in top display.

0 Process value (PV) is shown in top display.

1 Difference between process set value and process value (SV-PV) is shown in top display.

bdSP It defines the function of the bottom display. This parameter determines which value is shown in bottom display.

0 Process set value (SV) is shown in bottom display.

1 %Output value that is applied to process control output is shown in bottom display.

PinP
ConF

6.2.3 Process Input Type and Relevant Parameters with Process Input

iSSL

Defines the process input type.

0 TC input type selection

1 RTD input type selection

2 ⎓Voltage / Current input type selection.

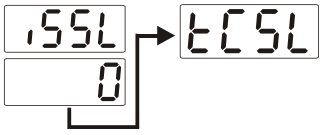

Defines type and scale of the thermocouple for TC input. It is active if TC input type is selected.

0 L (-100°C;850°C) or (-148°F;1562°F)

1 L (-100.0°C;850.0°C) or (-148.0°F;999.9°F)

2 J (-200°C;900°C) or (-328°F;1652°F)

3 J (-199.9°C;900.0°C) or (-199.9°F;999.9°F)

4 K (-200°C;1300°C) or (-328°F;2372°F)

5 K (-199.9°C;999.9°C) or (-199.9°F;999.9°F)

6 R (0°C;1700°C) or (32°F;3092°F)

7 R (0.0°C;999.9°C) or (32.0°F;999.9°F)

8 S (0°C;1700°C) or (32°F;3092°F)

9 S (0.0°C;999.9°C) or (32.0°F;999.9°F)

10 T (-200°C;400°C) or (-328°F;752°F)

11 T (-199.9°C;400.0°C) or (-199.9°F;752.0°F)

12 B (44°C;1800°C) or (111°F;3272°F)

13 B (44.0°C;999.9°C) or (111.0°F ; 999.9°F)

14 E (-150°C;700°C) or (-238°F;1292°F)

15 E (-150.0°C;700.0°C) or (-199.9°F;999.9°F)

16 N (-200°C;1300°C) or (-328°F;2372°F)

17 N (-200°C;1300°C) or (-328°F;2372°F)

18 C (0°C;2300°C) or (32°F;3261°F)

19 C (0.0°C;999.9°C) or (32.0°F;999.9°F)

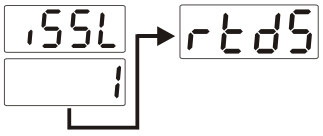

Defines type and scale of sensor for RTD input. It is active if RTD input is selected.

0 PT-100 (-200°C ; 650°C) or (-328°F ; 1202°F)

1 PT-100 (-199.9°C ; 650.0°C) or (-199.9°F ;999.9°F)

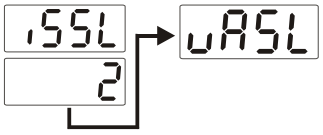

Defines input range and scale of ⎓Voltage / Current input.It is active if ⎓Voltage / Current is selected.

0 0...50mV ⎓ (-1999 ; 9999)

1 0...5V ⎓ (-1999 ; 9999)

2 0...10V ⎓ (-1999 ; 9999)

3 0...20mA ⎓ (-1999 ; 9999)

4 4...20mA ⎓ (-1999 ; 9999)

Defines point position for displays. It is active if ⎓Voltage / Current input is selected.

0 No point

1 Between first and second digits “0.0”

2 Between second and third digits “0.00”

3 Between third and fourth digits. “0.000”

It is active when ⎓Voltage / Current input is selected. It determines calibration type.

0 Fixed dual point calibration is done. It does not allow to adjust minimum and maximum value of calibration points. It can be adjusted from -1999 to 9999

1 It allows to do selectable dual point calibration.

2 It allows to define 16 calibration points.

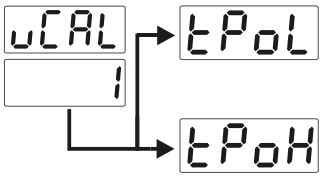

It defines minimum value for selectable dual point calibration. It is active if ⎓Voltage / Current input is selected. It can be adjusted from -1999 to 9999.

It defines maximum value for selectable dual point calibration. It is active if ⎓Voltage / Current is selected. It can be adjusted from -1999 to 9999.

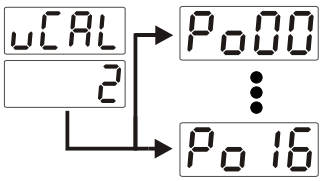

In multi point calibration, calibration points are defined with these parameters.

It is active if ⎓Voltage / Current is selected. It can be adjusted from -1999 to 9999.

In multi point calibration operation, defined scale is divided into 16 calibration points.

For example : uASL is 0 (0-50 mV⎓) .

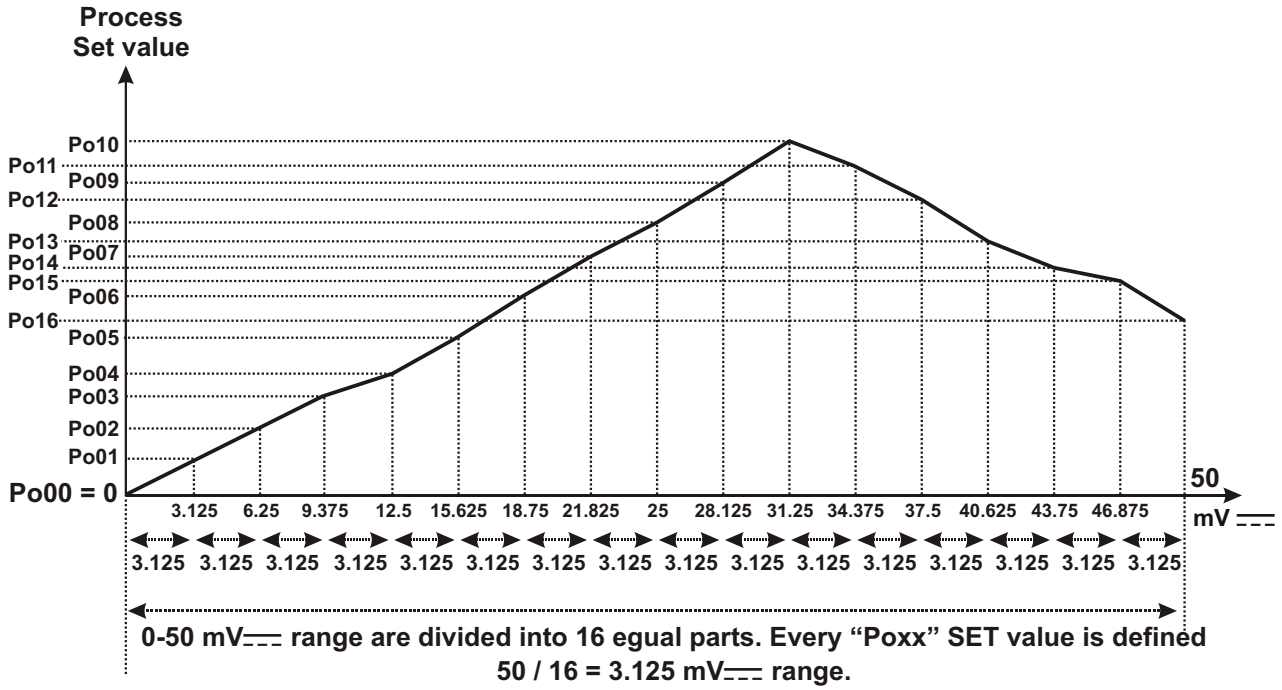

iSSL → 2 → CoEF

Coefficient value for ⎓Voltage / Current input. Process value is multiplied with this value.

It is active if ⎓Voltage / Current input is selected. It can be adjusted from 1.000 to 9.999.

unit Unit selection

- **°C** Unit is °C
- **°F** Unit is °F

iSSL → 2

- **U** Unit is U. It is active if ⎓Voltage / Current input is selected
- **-** No unit. It is active if ⎓Voltage / current input is selected

LoL Minimum value of operating scale. It can be changed according to input type and scale of the process.

uPL Maximum value of operating scale. It can be changed according to input type and scale of the process.

PUoF Display offset for process value. It can be adjusted -10% to +10% of scale. The defined value is added to process value.

iFLt Defines filter time for input signal. It can be adjusted from 0.0 to 900.0.

iSSL → 0 → CJnC

It is active if process input is selected TC input. It decides if cold junction compensation is active or not.

- **YES** Cold junction compensation is active.
- **no** Cold junction compensation is not active.

Pid
ConF

6.2.4 PID Configuration Parameters

If any output is configured as heating PID ;
P , I , d , Ct , oLL , ouL , oLt , Ar , SUoF , PoFS , PoSS , Strn , o-db , Sbou , SSEt , SSCo , SSCt parameters are accessible

If no output is configured as PID ;
Only o-db , Sbou , SSEt, SSCo, SSCt parameters are accessible in PID CONF menu.

P

PROPORTIONAL BAND (000.0% , 999.9%)
Full Scale (uPL - LoL) %.
If uPL = 1000 °C, LoL = 0 °C and P = 50.0 then
Proportional Band = (uPL - LoL) * P / 100.0
Proportional Band = (1000-0)*50.0/100.0 = 500 °C

I

INTEGRAL TIME (0000 sec, 3600 secs)
It can be changed by the user. When Tune operation stops, it can be changed by the device. If it is 0, integral control part does not run. When tune operation stops if this parameter is 0, this parameter can not be changed because of integral control part does not run.

d

DERIVATIVE TIME (000.0 sec, 999.9 secs)
It can be changed by the user. When Tune operation stops, it can be changed by the device. If it is 0, derivative control part does not run. When tune operation stops if this parameter is 0, this parameter can not be changed because of derivative control part does not run.

IF
PCnF
ConF
↓
CtYP
↓
Pid
IS SELECTED

Ct

CONTROL PERIOD TIME (1 sec, 150 secs)
It is control period

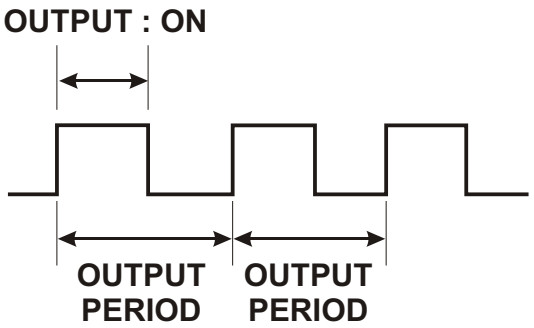

Relay Output : Output period must be short for stable process control. Relay must not be used in short output periods because of limited life of their relay contact (number of open/close events). Relay output must be used as control output in values near to 30 seconds or greater than this value.
SSR Output : If short output period is needed in a system (approximately 1-2 seconds) SSR driver output as last control element is recommended.

IF
PCnF
ConF
CtyP
Pid
IS SELECTED

oLL

MİNİMUM CONTROL OUTPUT (0.0% , ouL)

It is % of minimum output.
Even as a result of the PID calculation device calculates the %output value less than this parameter, heating or cooling output is active minimum for OLL parameter.

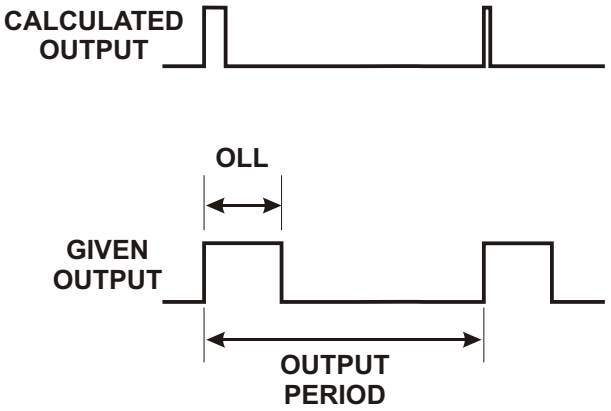

ouL

MAXIMUM CONTROL OUTPUT (oLL , 100.0%)

It is % of maximum output.
Even as a result of the PID calculation device calculates the %output value greater than this parameter, heating or cooling output is active maximum for OULH parameter.

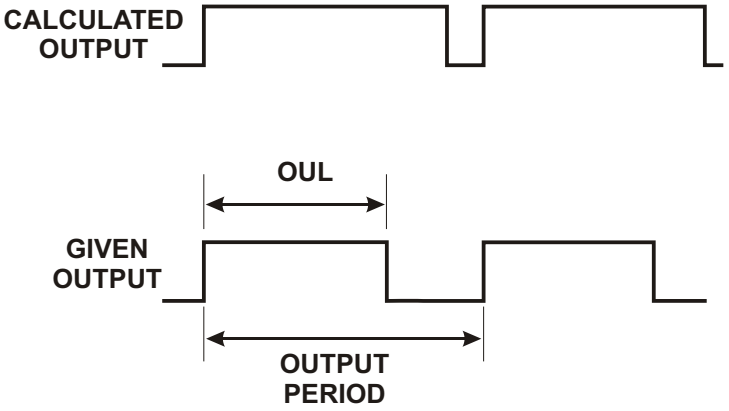

oLt

MINIMUM CONTROL OUTPUT TIME (0.0 sec , Ct)

Heating or cooling output can not be active less than this parameter. Even if this parameter is 0, this parameter is accepted 50 msecs for security.

IF

PCnF

ConF

↓

CtyP

↓

Pid

IS SELECTED

Ar

ANTI-RESET WINDUP (0, SCALE HIGH POINT)

While PID operation is running if

PSEt **- Ar <= process value <=** PSEt **+ Ar** condition is true, integral value is calculated. If the condition is not true, integral value is not calculated and last calculated integral value is used. If Ar Parameter is selected otAr , heating proportional band is used for heating PID process instead of Ar Parameter and cooling proportional band is used for cooling PID process instead of Ar Parameter.

Scale High Point : Maximum process input value in Pt-100 and Tc inputs

9999 for fixed dual point calibration used inputs,

Scale high point is the biggest one from tPoL or tPoH for selectable dual point calibration used inputs

Scale high point is the biggest one from Po00 or Po 16 for multi point calibration used inputs

Note: Point position changes according to process input type and scale, unit changes according to the selection in unit parameter.

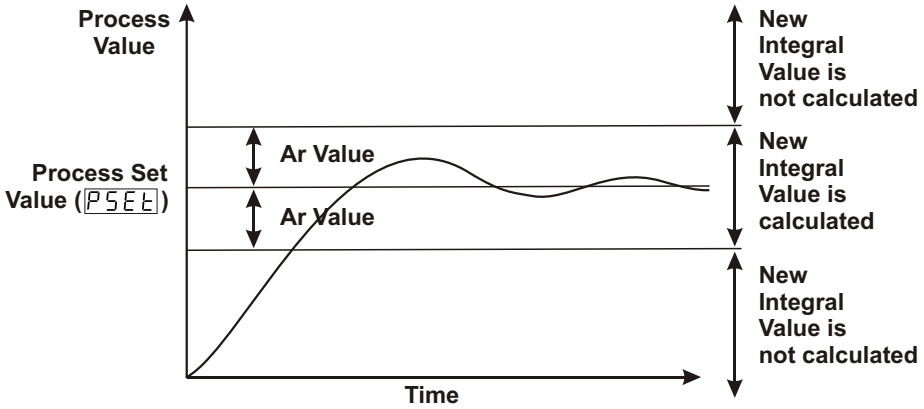

SUoF

SET VALUE OFFSET

((- SCALE HIGH POINT / 2) , (SCALE HIGH POINT / 2))

PSEt + SUoF Is used as set value in PID calculations. It is used for shifting the proportional band.

Example: If PSEt = 500°C, SUoF = 5°C or SUoF = -5°C, shifting of the proportional band is shown below :

Note: Point position changes according to process input type and scale, unit changes according to the selection in unit parameter.

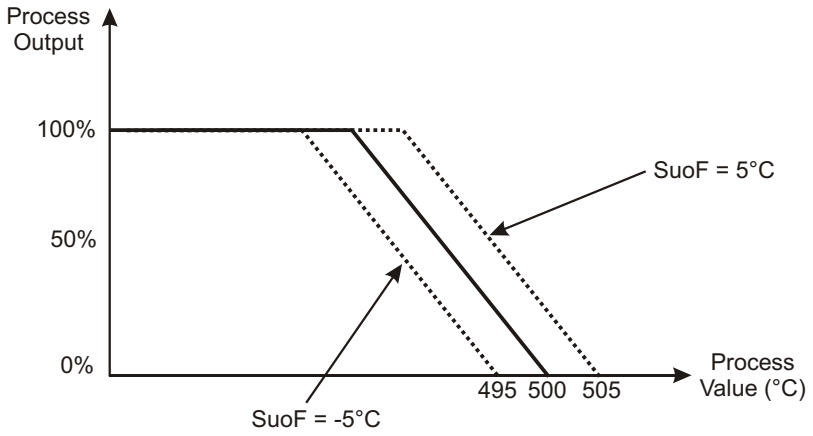

IF
PCnF
ConF
↓
CtyP
↓
Pid
IS SELECTED

PoFS PID OUTPUT OFFSET

(FOR HEATING PID 0.0%, 100.0%)
(FOR COOLING PID -100.0%, 0.0%)

This parameter is added to “Output %” which is calculated at the end of the PID.

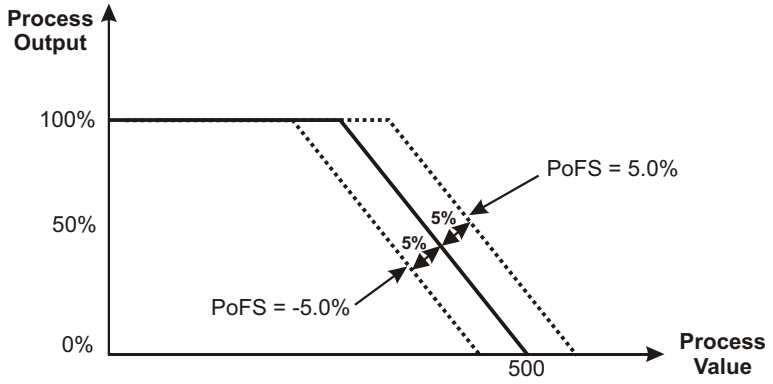

PoSS OUTPUT OFFSET RELATED TO PID SET

(FOR HEATING PID 0.0%, 100.0%)
(FOR COOLING PID -100.0%, 0.0%)

This parameter is added to the %process output that is calculated at the end of the PID according to process set value.
PoSS * PSEt / (uPL - LoL)

Example If PSEt = 500°C , uPL = 1000°C , LoL = 0 , PoSS = 5.0% then PoSS * PSEt / (uPL - LoL) = 5.0 * 500 /(1000-0) = 2.5%
2.5% is added to calculated process value.

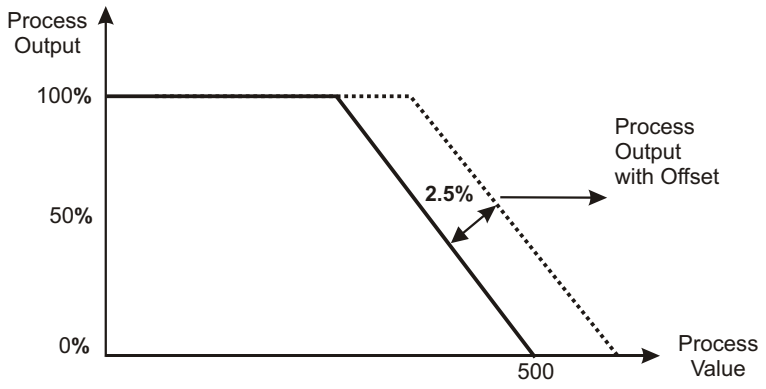

IF
PCnF
ConF
↓
CtyP
↓
Pid
IS SELECTED

Strn

PROCESS VALUE STABILIZATION
(1, SCALE HIGH POINT)

It is used for controlling if process value oscillates or not when tunn Parameter is AtUn or At.St
If;
PSEt - Strn**<= Process Value <=** PSEt **+** Strn condition is not true and process value starts to oscillate (as shown in the diagram). If tunn parameter is AtUn or At.St ,then AtEn parameter is selected YES And then Limit Cycle Tune operation starts for determining new PID parameters.

Scale High Point : Maximum process input value in Pt-100 and Tc inputs
9999 for fixed dual point calibration used inputs,
Scale high point is the biggest one from tPoL or tPoH for selectable dual point calibration used inputs
Scale high point is the biggest one from Po00 or Po 16 for multi point calibration used inputs

Note: Point position changes according to process input type and scale, unit changes according to the selection in unit parameter.

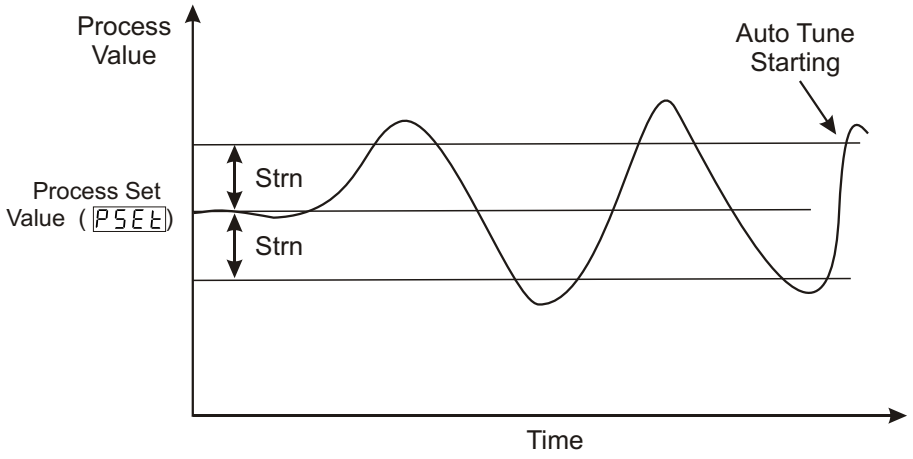

o-db

PROPORTIONAL BAND SHIFTING
((- SCALE HIGH POINT / 2) , (SCALE LOW POINT / 2))

If heating-cooling or only cooling function is performed ;
Cooling process set value is calculated by adding set value PSEt with parameter o-db
Control form can be ON/OFF or PID.

If set value for heating = PSEt + SUoF;
Then set value for cooling = PSEt + SUoF + o-db

Scale High Point : Maximum process input value in Pt-100 and Tc inputs
9999 for fixed dual point calibration used inputs,
Scale high point is the biggest one from tPoL or tPoH for selectable dual point calibration used inputs
Scale high point is the biggest one from Po00 or Po 16 for multi point calibration used inputs

Note: Point position changes according to process input type and scale, unit changes according to the selection in unit parameter.

If o-db > 0 (Dead Band)

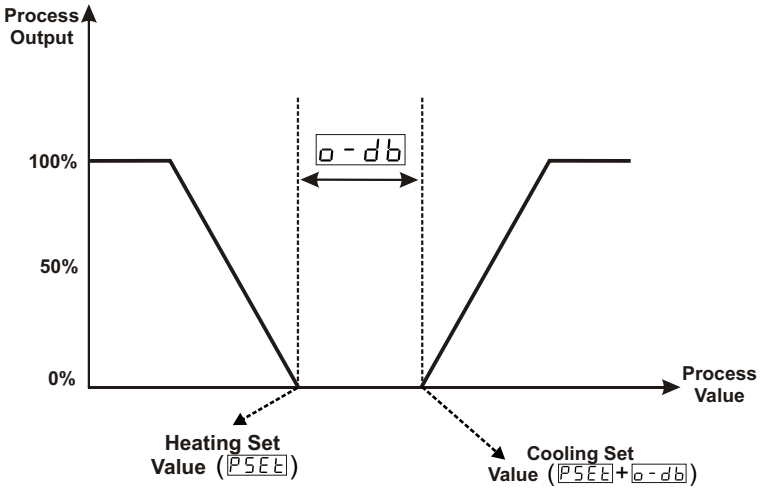

If o-db < 0 (Overlap Band)

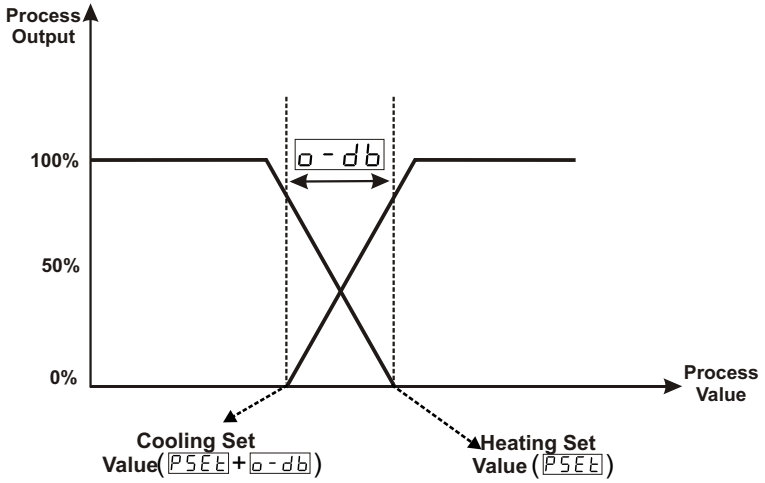

Sbou SENSOR BREAK OUTPUT VALUE (FOR HEATING PID 0.0%, 100.0%) (FOR COOLING PID -100.0%, 0.0%)

When sensor breaks, controlling of the process can continue by entering %output value to Sbou parameter.
If this parameter 0.0, process control output does not perform an output when sensor breaks.

SSEt Soft Start Set value

It can be adjusted from 0 to 9999 with increment and decrement buttons. If parameter is selected no, Soft start function becomes inactive. When the device power on, if the Soft start set value different from no and temperature value is lower than soft start value on heating processes, device starts soft start operation, until temperature reaches soft start set value. On soft start device output period is SSCt parameter value and device control output is SSCo parameter value.

SSCo Soft Start Control Output

It can be adjusted from 10% to 90% with increment and decrement buttons.

SSCt Soft Start Control Period

It can be adjusted from 1 to 100 sec with increment and decrement buttons.

PCnF
ConF

6.2.5 Process Output Configuration Parameters

oCnF — It determines if Process Output (SSR Driver Output) and Alarm Output-2 operates together or not.

- 0 — Process Output (SSR Driver Output) and Alarm Output-2 operates separately.
- 1 — Process Output (SSR Driver Output) and Alarm Output-2 operates together. Alarm functions of Alarm Output-2 can not be used

oFnC — It determines output functions of Process Outputs

- HEAt — Heating
- CooL — Cooling

CtyP — It determines control algorithms of Process Outputs

- on.oF — ON/OFF control algorithm
- PId — PID control algorithm

CtyP = on.oF

HYS — Hysteresis value of Process Outputs. It can be adjusted from 0% to 50% of full scale. (It is active if ON/OFF control is selected)

HYn — It determines operation form of hysteresis
(It is active if ON/OFF control is selected)

- 0 — SV + HYS/2 and SV - HYS/2
- 1 — SV and SV+HYS or SV and SV-HYS

oFFt — In ON/OFF operation, this time must be passed for the output to be energised again. It can be adjusted from 0.0 to 100.0 seconds.
(It is active if ON/OFF control is selected)

6.2.6 ALARM Output-1 Configuration Parameters

ALn1 / ConF

Lou1 It determines logic output function for Alarm Output-1

- 0 Alarm output
- 1 Manual / Automatic data output
- 2 Sensor break alarm output
- 3 Output is active when the process value is out of the band which is defined with minimum value of operating scale LoL And maximum value of operating scale uPL

Lou1 = 0 → ALt1 It determines alarm type for Output-1. It is active if logic output function of Alarm Output-1 is alarm output.

- 0 Process high alarm
- 1 Process low alarm
- 2 Deviation high alarm
- 3 Deviation low alarm
- 4 Deviation band alarm
- 5 Deviation range alarm

Process high alarm

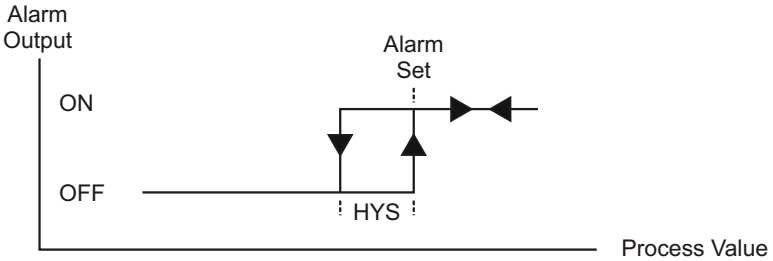

Process low alarm

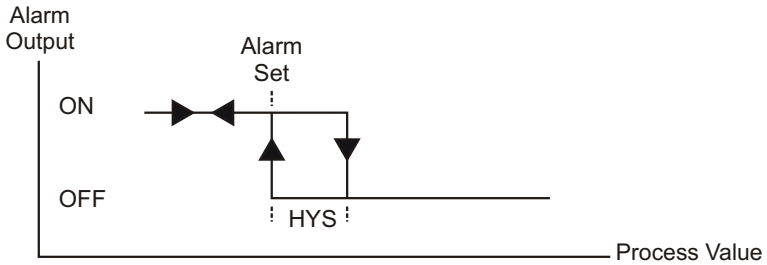

Deviation high alarm

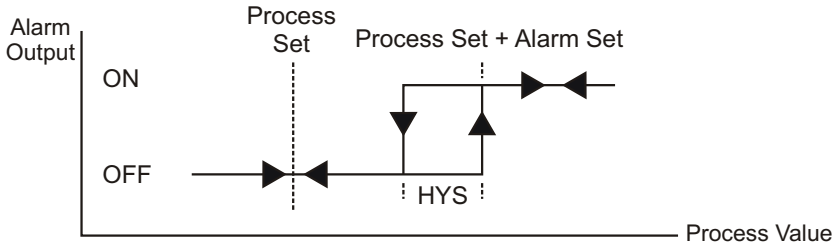

Deviation low alarm

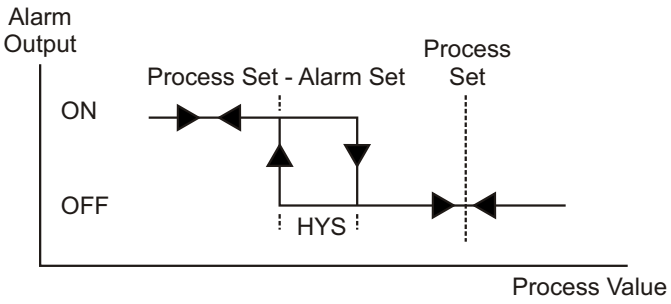

Deviation band alarm

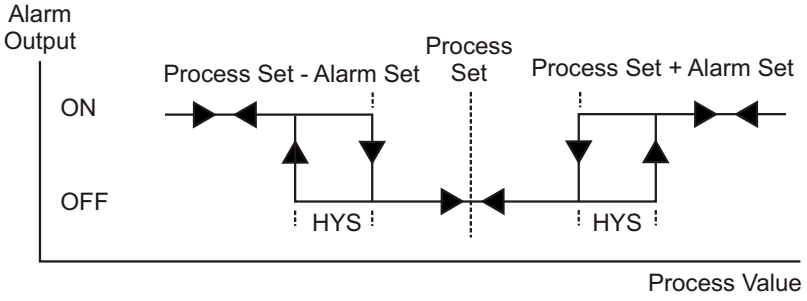

Deviation range alarm

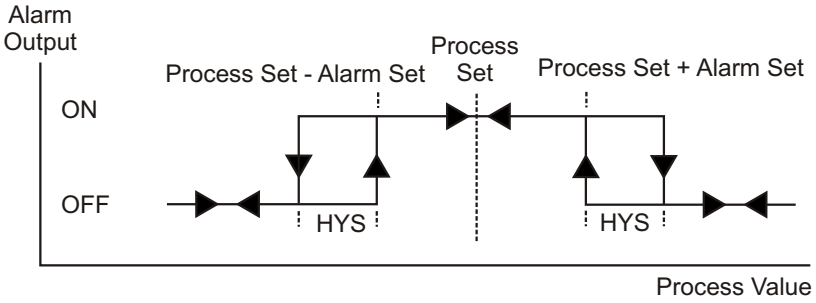

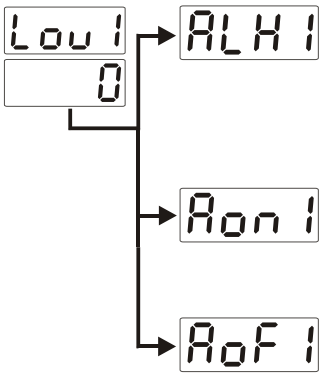

Alarm- 1 hysteresis value.

it can be adjusted from 0% to 50% of process input scale (uPL - LoL) It is active if logic output function of Alarm Output-1 is alarm output.

Alarm on delay time for Alarm Output-1. It can be adjusted from 0 to 9999 seconds. It is active if logic output function of Alarm Output-1 is alarm output.

Alarm off delay time for Alarm Output-1. It can be adjusted from 0 to 9998 seconds. When the value is greater than 9998, LtCH is seen on the screen. It means alarm latching output is selected. It is active if logic output function of Alarm Output-1 is alarm output.

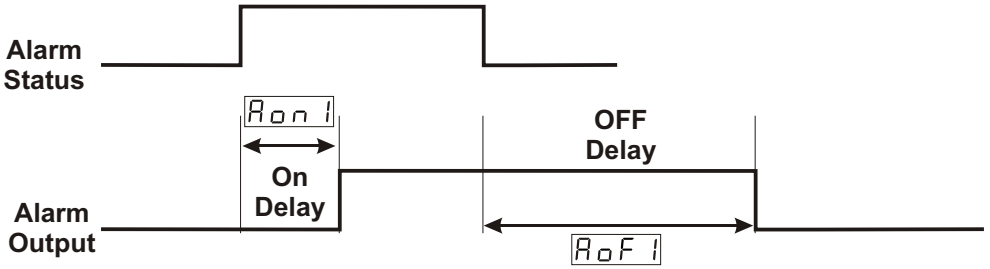

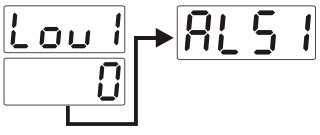

Alarm stabilisation time for Alarm Output-1. It can be adjusted from 0 to 99 second. It is active if logic output function of Alarm Output-1 is alarm output. After the unit is power-on and Alarm Stabilisation Time is expired, if an alarm condition which is selected with Alt1 is present, then Alarm output-1 becomes active.

oCnF → ALn2 / ConF

0

6.2.7 ALARM Output-2 Configuration Parameters

"Aln2 Conf" Menu is accessible if oCnF parameter in "PCnF ConF" is 0

Lou2

It determines logic output function for Alarm Output-2

- 0 Alarm output
- 1 Manual / Automatic data output
- 2 Sensor break alarm output
- 3 Output is active when the process value is out of the band which is defined with minimum value of operating scale LoL And maximum value of operating scale uPL

Lou2 → ALt2

0

It determines alarm type for Output-2. It is active if logic output function of Alarm Output-2 is alarm output.

- 0 Process high alarm
- 1 Process low alarm
- 2 Deviation high alarm
- 3 Deviation low alarm
- 4 Deviation band alarm
- 5 Deviation range alarm

Process high alarm

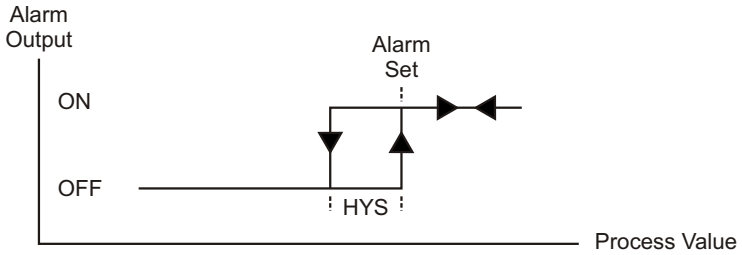

Process low alarm

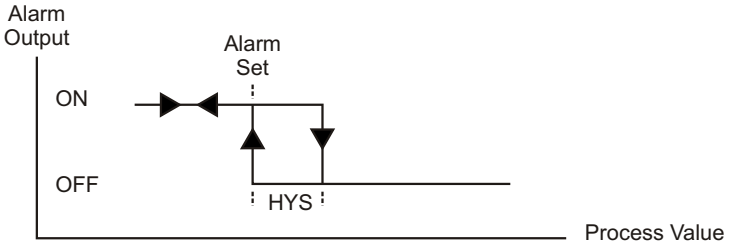

Deviation high alarm

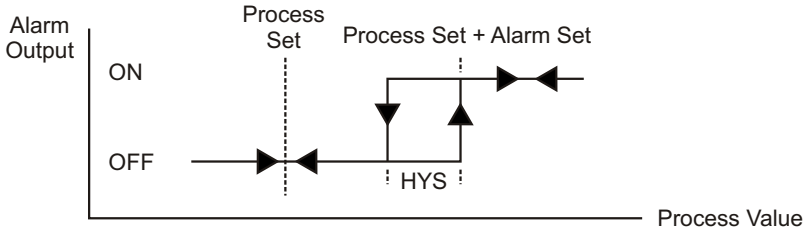

Deviation low alarm

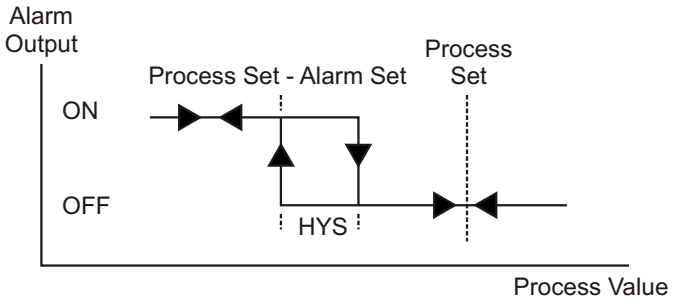

Deviation band alarm

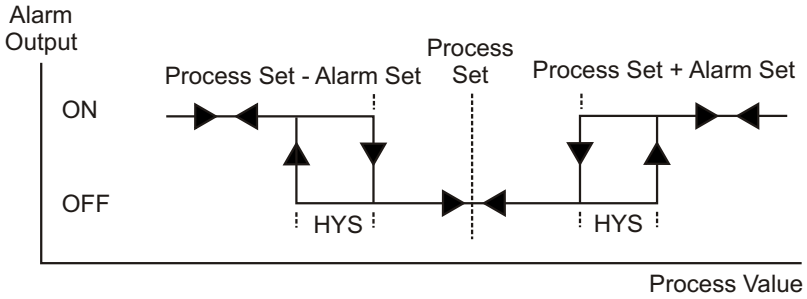

Deviation range alarm

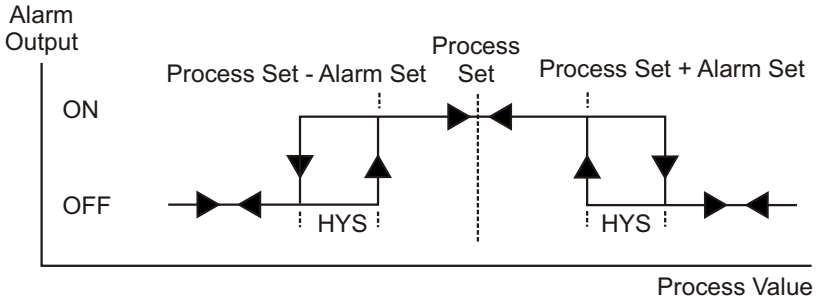

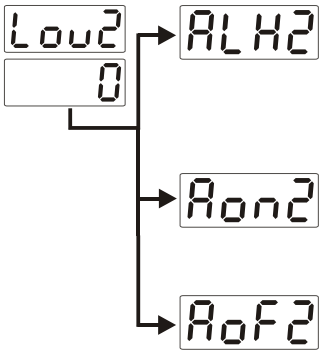

Alarm- 2 hysteresis value.

it can be adjusted from 0% to 50% of process input scale (uPL - LoL) It is active if logic output function of Alarm Output-2 is alarm output.

Alarm on delay time for Alarm Output-2. It can be adjusted from 0 to 9999 seconds. It is active if logic output function of Alarm Output-2 is alarm output.

Alarm off delay time for Alarm Output-2. It can be adjusted from 0 to 9998 seconds. When the value is greater than 9998, LtCH is seen on the screen. It means alarm latching output is selected. It is active if logic output function of Alarm Output-2 is alarm output.

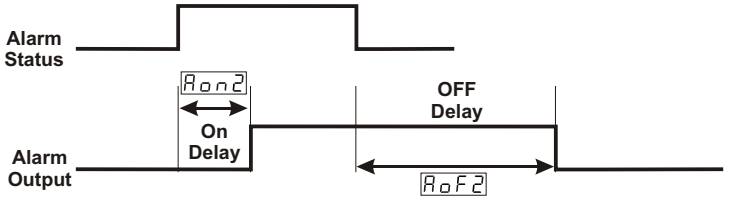

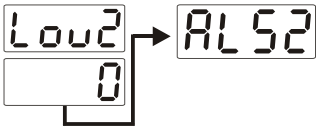

Alarm stabilisation time for Alarm Output-2. It can be adjusted from 0 to 99 second. It is active if logic output function of Alarm Output-2 is alarm output. After the unit is power-on and Alarm Stabilisation Time is expired, if an alarm condition which is selected with Alt2 is present, then Alarm output-2 becomes active.

"Aln2 Conf" Menu is accessible if oCnF parameter in "PCnF ConF" is 0

GEnn
ConF

6.2.8 General Parameters

SU-L Minimum value for process set and alarm set values. It is named as low limit of set scale.
It can be adjusted from low limit of input selected with **inSL** parameter to **SU-u** parameter.
Please refer to Section 6.2.3 Process Input Type and Relevant Parameters with Process Input for **inSL** parameter

SU-u Maximum value for process set and alarm set values. It is named as high limit of set scale.
It can be adjusted from **SU-L** to high limit of input selected with **inSL** Parameter.
Please refer to Section 6.2.3 Process Input Type and Relevant Parameters with Process Input for **inSL** parameter

Prt1 **Alarm Set Values Protection**

no Alarm Set values can be changed

YES Alarm Set values can not be changed. Alarm set values parameters, **ALr1** and **ALr2** , are not accessible

Prt2 **AUTO / MANUAL Selection Button Protection**

no Auto or Manual selection is possible with A/M button in Main Operation screen

YES Auto or Manual selection is not possible with A/M button in Main Operation screen

Prt3 **AT (AUTO TUNE) Button Protection**

no Limit Cycle Tuning operation can be active or inactive with AT (Auto Tune) Button in Main Operation screen

YES Limit Cycle Tuning operation can not be active or inactive with AT (Auto Tune) Button in Main Operation screen

PASS
ConF

6.2.9 Technician Password

tCPS It is used for accessing to the technician parameters.
It can be adjusted from 0 to 9999.

If it is 0 ; there is no password protection while entering to the technician parameters.

If it is different from " 0" and user wants to access to the technician parameters;
1- If technician does not enter tCPS password correctly:
It turns to operation screen without entering to operator parameters.

2- When tCPS in top display and 0 in bottom display is observed, if technician presses SET button without entering tCPS password (For observing parameter)
Technician can see all menus and parameters except Technician Password menu ("Pass Conf"), but parameters can not be changed.
(Please refer to Section 7. Failure Messages (4) in ESM-7730 Process Controllers)

7. Failure Messages in ESM-7730 Process Controllers

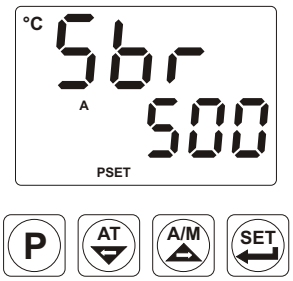

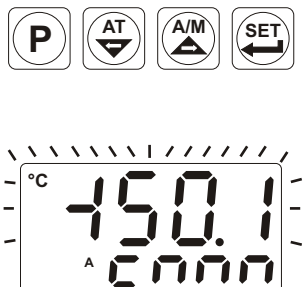

1 - Sensor failure in analogue inputs. Sensor connection is wrong or there is no sensor connection.

2 - If value on top display blinks : If analogue input value is less than minimum value of operating scale [LoL] value on the top display starts to blink.

In "PınP Conf" Menu if;

[ıSSL] [0] ; [tCSL] [3] ; [unıt] [°C] ;
[LoL] [-199.9] ; [uPL] [900.0] are defined.
Adjust [LoL] [-50.0]

If analogue input value is less than minimum value of operating scale [LoL] Value on the top display starts to blink.

Please refer to Section 6.2.3 for detailed information about this parameter.

3 - If value on top display blinks : If analogue input value is greater than maximum value of operating scale [uPL] top display starts to blink.

In "PınP Conf" Menu if;

[ıSSL] [0] ; [tCSL] [3] ; [unıt] [°C] ;
[LoL] [-199.9] ; [uPL] [900.0] are defined
Adjust [uPL] [850.0]

If analogue input value is greater than maximum value of operating scale [uPL] value on the top display starts to blink.

Please refer to Section 6.2.3 for detailed information about this parameter.

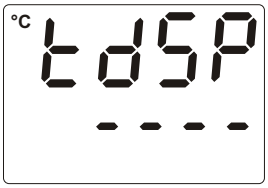

4 - If technician password is different from "0" and technician accesses to the parameters by Set button without entering the technician password and wants to change a parameter, device does not allow to do any changes in parameters. If increment or decrement button is pressed, a warning message will appear on the bottom display as shown on the left.

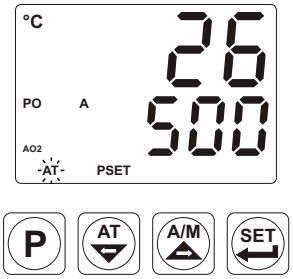

5 - If tuning operation can not be completed in 8 hours, AT led starts to blink.Blinking can be canceled by pressing Enter button.

For details on parameters, refer to Section 6.2.1

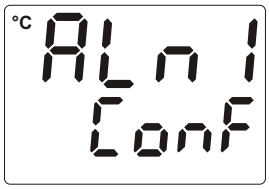

6 - If user does not do anything for 120 seconds while device is on technician menus, device turns to operation screen.

8. Specifications

Device Type : Process Controller
Housing&Mounting : 72mm x 72mm x 87.5mm DIN Size 43700 plastic housing for panel mounting. Panel cut-out is 69x69mm. Type-1Enclosure Mounting.
Protection Class : NEMA 4X (IP65 at front, IP20 at rear).
Weight : Approximately 0.20 Kg.
Environmental Ratings : Standard, indoor at an altitude of less than 2000 meters with none condensing humidity.
Storage/Operating Temperature : -40 °C to +85 °C / 0 °C to +50 °C
Storage/Operating Humidity : 90 % max. (None condensing)
Installation : Fixed installation
Over Voltage Category : II
Pollution Degree : II, office or workplace, none conductive pollution
Operating Conditions : Continuous
Supply Voltage and Power : 100 - 240 V~ (-15% / +10%) 50/60 Hz 6VA
24 V~ (-15% / +10%) 50/60 Hz 6VA
24 V⎓ (-15% / +10%) 6W
12 V⎓ (-15% / +10%) 6W
Process Inputs : Universal input TC, RTD, ⎓ Voltage/Current
Thermocouple Input Types : Selectable by parameters
L (DIN43710) ,
J ,K ,R ,S ,T ,B ,E ,N (IEC584.1)(ITS90) , C (ITS90)
Thermoresistance Input Types : PT 100 (IEC751) (ITS90)
⎓ Voltage Input Types : Selectable by parameters 0..50mV ⎓ , 0..5V ⎓, 0..10V ⎓
⎓ Current Input Types : Selectable by parameters 0...20mA ⎓ , 4...20mA ⎓

Accuracy	: ± 0,25% of full scale for thermocouple, thermoresistance and voltage, ± 0,70% of full scale for current.
Cold Junction Compensation	: Automatically ± 0.1°C/1°C.
Line Compensation	: Maximum 10 .
Sensor Break Protection	: Upscale
Sampling Cycle	: 3 samples per second
Input Filter	: 0.0 to 900.0 seconds
Control Forms	: Programmable ON / OFF, P, PI, PD or PID.
Relay Output	: 2 pieces 5A@250V ~ (at resistive load) (Programmable control or alarm output) (Electrical Life :100000 operation (Full Load))
Standard SSR Driver Output	: Maximum 17mA, Max. 25V ⎓
Process Display	: 13.2 mm Red 4 digits LED Display
Set Display	: 9.1 mm Green 4 digits LED Display
Led Indicators	: AT (Auto Tune), M (Manual Mode), A (Automatic Mode), PSET (Process Set value), ASET1 (Alarm-1Set value), ASET2 (Alarm-2 Set value), PO (Process Output) , AO1 (Alarm Output-1) , AO2 (Alarm Output-2) °C / °F / V unit leds
Approvals	: UL Recognized Component (File No : E 254103), EAC , CE

9. Other Informations

Manufacturer Information:
Emko Elektronik Sanayi ve Ticaret A.Ş.
Demirtaş Organize Sanayi Bölgesi Karanfil Sk. No:6 16369
BURSA/TURKEY

Phone : +90 224 261 1900
Fax : +90 224 261 1912

Repair and Maintenance Service Information:
Emko Elektronik Sanayi ve Ticaret A.Ş.
Demirtaş Organize Sanayi Bölgesi Karanfil Sk. No:6 16369
BURSA/TURKEY
Phone : +90 224 261 1900
Fax : +90 224 261 1912