MANUAL
TIMER TI484801

Wachendorff Prozesstechnik GmbH & Co. KG
www.wp-direkt.de
e-mail: RSS@wachendorff.de
Version 2.0

SIZE AND INSTALLATION

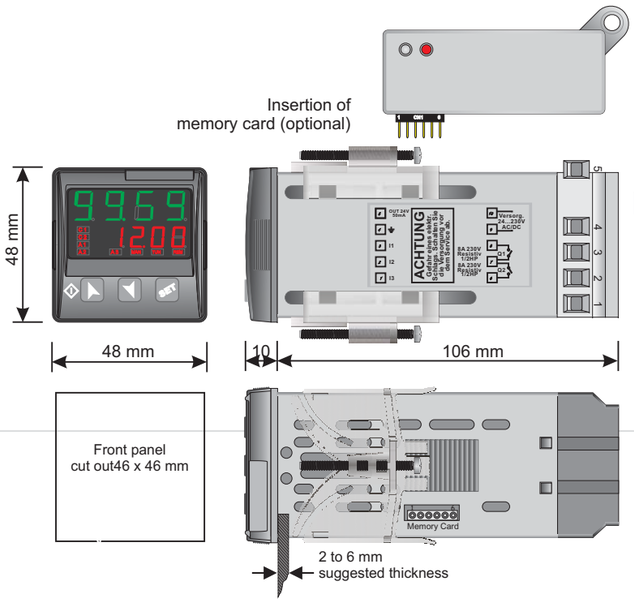

SETPOINT MODIFICATION

	PRESS	DISPLAY
1	SET	Visualizes SETPOINT 1 / 2
2	▲ or ▼	Modifies selecter SET

LED	MEANING
Q1	Report the activation of Q1
Q2	Report the activation of Q2
SER	Report serial transmission by the TI484801

TECHNICAL DATA

Operating temperature	*Operating temperature 0-40°C, humidity 35..95uR%*
Sealing	*IP65 (with gasket) on front panel, IP20 box and terminal blocks*
Material	*PC ABS UL94V0 self-extinguishing*
Digital Inputs	*3PNP/NPN configurable as analogue for potentiometers.(max 28 Vdc in PNP mode)*
Outputs	*2 relays 8A resistive charge*
OUT 24V	*30mA(24Vac),40mA(24 Vdc),60mA (110...230Vac)*
Back-UP	*Rechargeable battery, approx. 60days autonomy*
Power Supply	*24...230Vac/Vdc +/-15% 50/60Hz / 2W*

INTRODUCTION

Thanks for choosing a Wachendorff device.

The timer TI484801 can be set in 5 different modes; Timer-ON, Timer-OFF, Pause-Work, Oscillator, PWM (time-proportioned output), all options with independent settings of ON-OFF time.
3 universal digital inputs are availables (NPN/PNP/Potential free contact) for external commands like Start, Stop and Reset; one input is also analogue in order to allow the modification of working times by an external potentiometer.
5 different time bases (hundredths, tenths, seconds, minutes, hours).

Counting can be incremental or decremental.

Read carefully the safety guidelines and programming instructions contained in this manual before using/connecting the device.

Disconnect power supply before proceeding to hardware settings or electrical wirings.

Only qualified personnel should be allowed to use the device and/or service it and in accordance to technical data and environmental conditions listed in this manual.

Do not dispose electric tools together with household waste materials in observance of European Directive 2002/96/CE

WIRING DIAGRAM

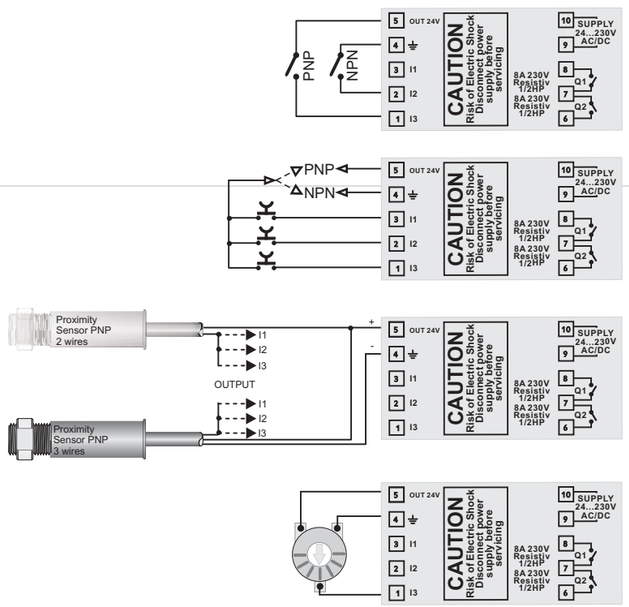

POTENTIOMETER 0 to 5/10 Kohm
Accuracy 1.000 points

Potentiometer:
To modify Set1 or Set2 by external potentiometer follow the steps below:
1- use potentiometers 0 to 5/10kohm
2- connect cursor to pin I3; a wrong connection may damage the potentiometer and lead to lock of the device.
3- accuracy on input is max 1000 points, therefore set the parameters "Upper limit" and "Lower limit" with a max difference of 1000 units.
(Ex.: LoS1 to 50,0 and uPS1 to 150,0 to modify time value related to Set1 between 50 and 150 seconds with steps of one tenth). Greater differences would make unstable the less significant digit.
4- To calibrate the scale of potentiometer enter the configuration mode and select:
Hin.3 as Pot
Fin.3 as Set1 or Set2
P.tAr as Enable
Exit configuration mode and place potentiometer at minimum level and press ▼ key, then place potentiometer at max level and press premere ▲ key: the device automatically exit the calibration procedure.
N.B.: A switch-off of the device would interrupt the calibration.

MEMORY CARD (optional)

Parameters and setpoint values can be copied from one device to another using the Memory card. **Attention: Pls. perform an update of the memory card first.**

There are two methods:

> With the device connected to the power supply
insert the memory card **when the controller is off**.

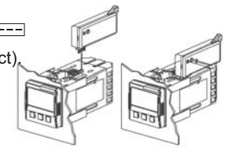

On activation display 1 shows and display 2 shows ----
(Only if the values stored on Mmeory Card are correct).
By pressing the ▼ key display 2 shows LoAd
Confirm using the ▼ key .
The device loads the new data and starts again.

> With the controller disconnected from the power supply:
The memory card is equipped with an internal battery with a life of about 1000 uses.
Insert the memory card and press the programming button.
When writing the parameters, the LED turns red and on completing the procedure it changes to green. It is possible to repeat the procedure.

⚠ UPDATING MEMORY CARD.

To *update* the memory card values, follow the procedure described in the first method, setting display 2 to ---- so as not to load the parameters on controller.

Enter configuration and **change at least one parameter**.
Exit configuration. Changes are saved automatically.

LOADING DEFAULT VALUES

This procedure restores the factory settings of the instrument.

LOADING DEFAULT VALUES

	PRESS	DISPLAY	DO
1	SET for 3 seconds	On display 1 appears 0000 with 1st digit blinking, while display 2 shows PASS	
2	▲ or ▼	Modify blinking digit and pass to the next one pressing SET	Enter Password 9999
3	SET to confirm	Device loads default values	Switch the device off and restart it

CONFIGURATION PARAMETER MODIFICATION

	PRESS	DISPLAY	DO
1	SET for 3 seconds	On display 1 appears 0000 with 1st digit blinking, while display 2 shows PASS	
2	▲ or ▼	Modify blinking digit and pass to the next one pressing SET	Enter Password 1234
3	SET to confirm	Display shows first parameter of configuration table Func	
4	▲ or ▼	Scroll parameters	
5	SET + ▲ or ▼	Increase or decrease visualized value pressing ▲ and an arrow key	Enter the new data that will be saved when releasing keys
6	▲ + ▼	End configuration, controller exits from configuration	

LIST OF PARAMETERS

FUNCTION CONFIGURATION

	P-01 Timer Function	*Timer functions*	
ton	Timer On	*Activates output at count end*	Default
toFF	Timer Off	*Deactivates output at count end*	
PAUS	Pause/Work	*T1 and T2 start in sequency*	
osc	Oscillator	*T1 and T2 start in sequency repeatedly*	
PUN	PWM	*Percentage output activation on fixed time base*	

BACKUP MEMORY CONFIGURATION

	P-02 Power-off Memory	*Power-off memory*	
diS	Disable	*Disabled*	Default
oNLY	Only Timer	*Only timer value in memory*	
ALL	Timer / State	*Timer value and START/STOP status in memory*	

INPUT CONFIGURATION

	P-03 Hardware Input 1	*Input 1 configuration*	
nPn	NPN	*NPN*	
PnP	PNP	*PNP*	Default
tEL	TTL	*TTL*	

	P-04 Hardware Input 2	*Input 2 configuration*	
nPn	NPN	*NPN*	
PnP	PNP	*PNP*	Default
tEL	TTL	*TTL*	

	P-05 Hardware Input 3	*Input 3 configuration*	
PnP	PNP	*PNP*	Default
tEL	TTL	*TTL*	
Pot	Potent.	*Potentiometer*	

	P-06 Active State Input 1	*Input 1 activation*	
HLEv	High Level	*High level*	
LLEv	Low Level	*Low level*	
rISE	Rising edge	*Transitory in rising*	Default

	P-07 Active State Input 2	*Input 2 activation*	
HLEv	High Level	*High level*	
LLEv	Low Level	*Low level*	
rISE	Rising edge	*Transitory in rising*	Default

	P-08 Active State Input 3	*Input 3 activation*	
HLEv	High Level	*High level*	
LLEv	Low Level	*Low level*	
rISE	Rising edge	*Transitory in rising*	Default

	P-09 Function Input 1	*Input 1 function*	
diS	Disable	*Disabled*	
SESt	Start / Stop	*Start / Stop*	Default
SESr	Start / Stop-Reset	*Start / Stop-Reset*	
rSSt	Reset-Start / Stop	*Reset-Start / Stop*	
rSS	Reset / Start / Stop	*Reset / Start / Stop*	

	P-10 Function Input 2	*Input 2 function*	
diS	Disable	*Disabled*	
rES	Reset	*Reset*	Default

	P-11 Function Input 3	*Input 3 function*	
diS	Disable	*Disabled*	
WAit	Wait	*Wait (count lock)*	
HoLd	Hold	*Hold (locks display but count continues)*	Default
SEt1	Potent. To SET1	*Modify SET1 by potentiometer*	
SEt2	Potent. To SET2	*Modify SET2 by potentiometer*	

	P-12 Function Key UP	*Function of ▼*	
diS	Disable	*Disabled*	Default
SESt	Start / Stop	*Start / Stop*	
SESr	Start / Stop-Reset	*Start / Stop-Reset*	
rSSt	Reset-Start / Stop	*Reset-Start / Stop*	
rSS	Reset / Start / Stop	*Reset / Start / Stop*	
rES	Reset	*Reset*	
WAit	Wait	*Wait (count lock)*	
HoLd	Hold	*Hold (locks display but count continuels)*	

OUTPUT CONFIGURATION

	P-13 Output Q1 Setup	*Output Q1 selection*	
diS	Disable	*Disabled*	
t.no	Out Timer 1 n.o.	*Timer output 1 n.o.*	Default
t.nc	Out Timer 1 n.c.	*Timer output 1 n.c.*	
t2no	Out Timer 2 n.o.	*Timer output 2 n.o.*	
t2nc	Out Timer 2 n.c.	*Timer output 2 n.c.*	
StAr	Start	*Start*	
StoP	Stop	*Stop*	

	P-14 Output Q2 Setup	*Output Q2 selection*	
diS	Disable	*Disabled*	Default
t.no	Out Timer 1 n.o.	*Timer output 1 n.o.*	
t.nc	Out Timer 1 n.c.	*Timer output 1 n.c.*	
t2no	Out Timer 2 n.o.	*Timer output 2 n.o.*	
t2nc	Out Timer 2 n.c.	*Timer output 2 n.c.*	
StAr	Start	*Start*	
StoP	Stop	*Stop*	

DISPLAY CONFIGURATION

	P-15 Type of Timer	***Count mode***	
incr	Incremental	*Incremental*	Default
dECr	Decremental	*Decremental*	

SETPOINT CONFIGURATION

	P-16 Format Set 1	***Count format***	
FoS1			

	P-17 Format Set 2	***Count format***	
FoS2			
SSEc	Second.Cent	*Seconds, Cents*	
SSSd	Second.Decimal	*Seconds, Tenths*	Default
SSSS	Second	*Seconds*	
MMSS	Minute.Second	*Minutes, Seconds*	
HHMM	Hour.Minute	*Hour, Minutes*	
HHHH	Hour	*Hour*	

	P-18 Display Set 1	***Set 1 visualization***	
diS	Disable	*Disabled*	
viSu	Visualized	*Visualized*	
Mod	Modifiable	*Visualized and modifiable*	Default

	P-19 Display Set 2	***Set 2 visualization***	
diS	Disable	*Disabled*	Default
viSu	Visualized	*Visualized*	
Mod	Modifiable	*Visualized and modifiable*	

	P-20 Lower limit Set 1	***Set 1 lower limit***	0.0
LoS1			

	P-21 Upper limit Set 1	***Set 1 upper limit***	99.9
uPS1			

	P-22 Lower limit Set 2	***Set 2 lower limit***	0.0
LoS2			

	P-23 Upper limit Set 2	***Set 2 upper limit***	99.9
uPS2			

	P-24 Potent. tarature	***Potentiometer calibration procedure***	
diS	Disable	*Disabled*	Default
En	Enable	*Enabled*	

TI484801 “TIMER”

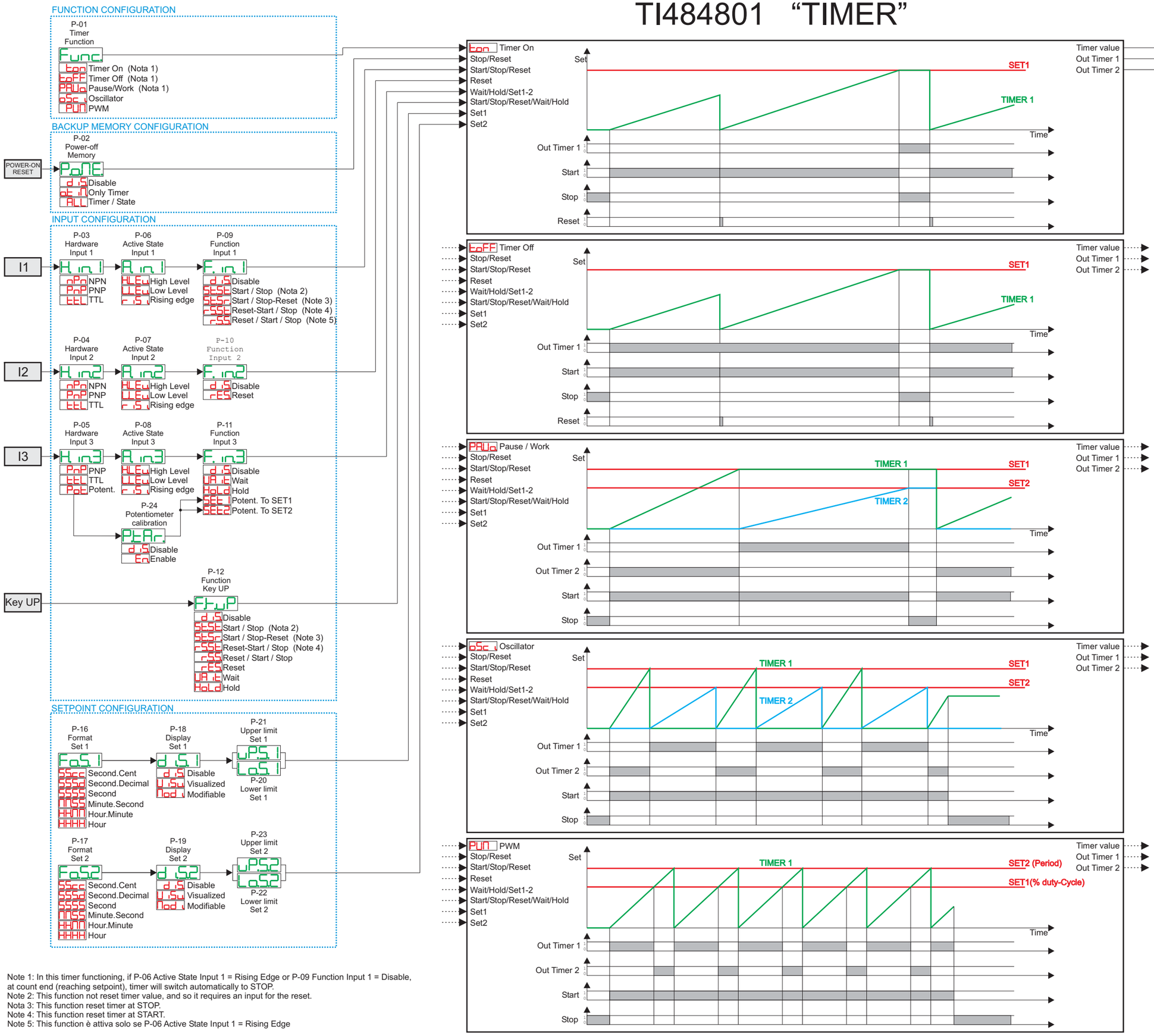

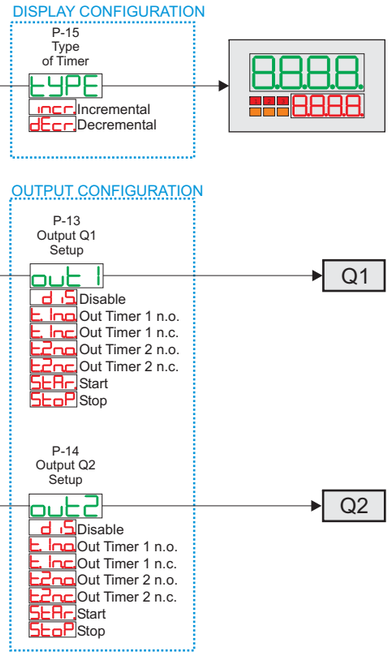

INPUT TYPE / LOGIC LEVEL	NPN INPUT	PNP INPUT	TTL INPUT
H	< 4,7 v	>5,7 v (I1, I2) >12,4 v (I3)	>2,5 v
L	> 5,7 v	< 4,7 v (I1, I2) < 10,2 v (I3)	< 2,0 v

TABLE of ERROR MESSAGES

- E-01 ERROR WRITING EEPROM Memory (Note 1)
- E-02 ERROR READING EEPROM Memory (Note 1)
- E-03 Incorrect parameters (Note 1)
- E-04 Incorrect calibration data (Note 1)
- E-05 Incorrect status data (Note 1)
- E-06 Incorrect BACKUP registers (Note 2)

Note 1:
Switch the device off and restart it; if error is still notified, contact technical service
Note 2:
Discharged battery: keep the device connected to power supply in order to recharge the battery.

⚠ In PWM mode, the only option available on parameters 16 FoS1 and 17 FoS2 for format of SET1 and SET2 is SSSS (seconds).
Low and upper limits for SET1 (related to percentage of work or Duty Cycle) are allowed in the range 0 ... 100 (%).

Note 1: In this timer functioning, if P-06 Active State Input 1 = Rising Edge or P-09 Function Input 1 = Disable, at count end (reaching setpoint), timer will switch automatically to STOP.
Note 2: This function not reset timer value, and so it requires an input for the reset.
Nota 3: This function reset timer at STOP.
Note 4: This function reset timer at START.
Note 5: This function è attiva solo se P-06 Active State Input 1 = Rising Edge