Enclosure series aluNORM

Type: AD 104

Material-No.: 101.104.000

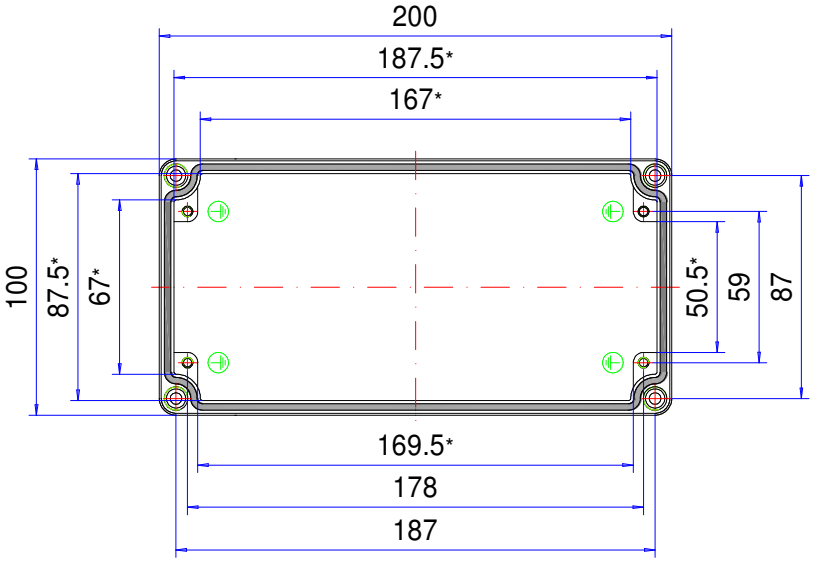

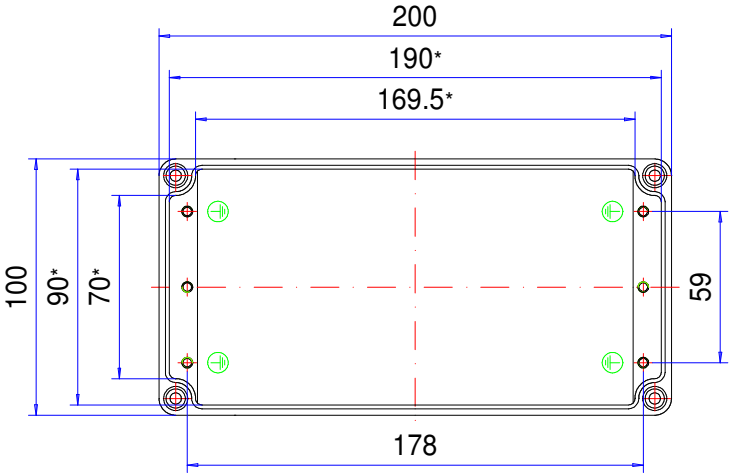

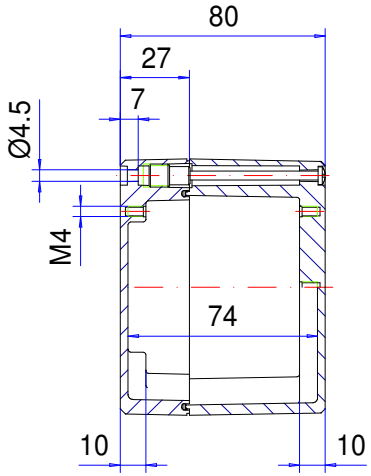

* Please note: Mould slope for casting ejection, dimensions in the amount of the bottom!

Enclosure material	GD-Al Si 12 (DIN 1725)		Weight	910 g
Lid screws	4x stainless steel 1.4567 (V2A), captive		Earthing screws	4x M4x6, copper-plated
Gasket	1x TPE moulded gasket, silicone-free, black		Coating	Powder coating RAL 7032, pebble grey
Ingress protection	IP66 EN 60529		Tolerance	GTA 13/5 DIN 1688-4 (outside dimensions ±0,5mm)