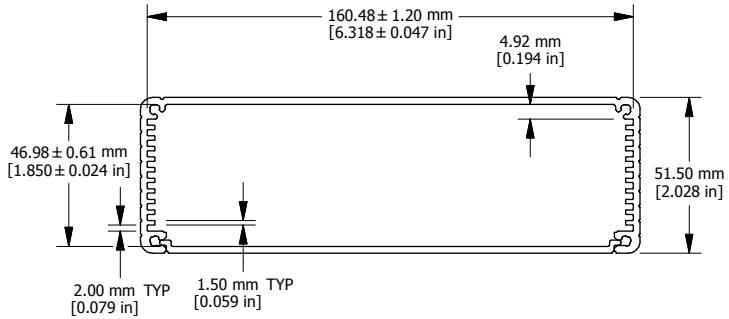

EXTRUSION

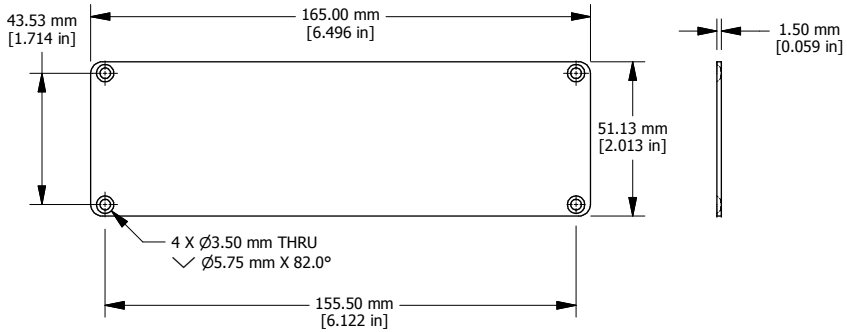

EXTRUSION DESIGNED FOR 160MM WIDE PC BOARD

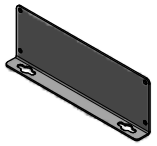

OPTIONAL FLANGE
END PANELS 1455TF

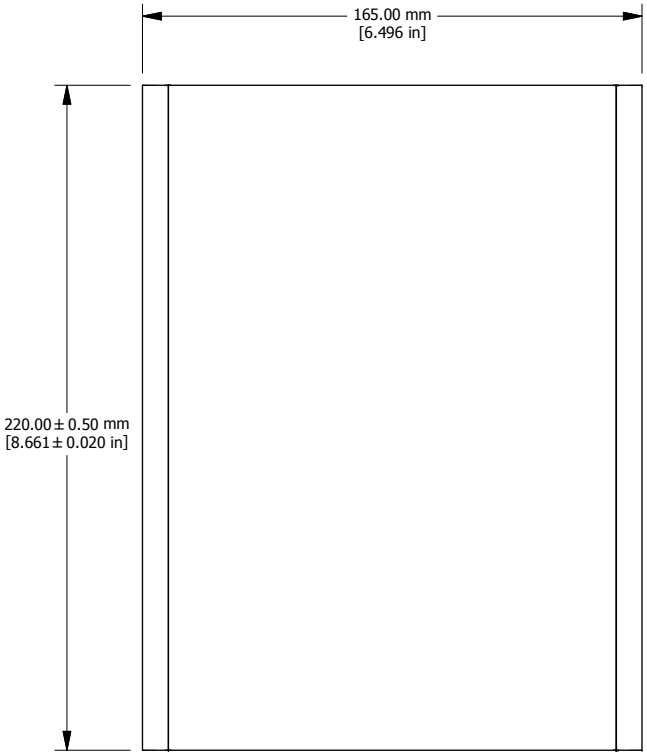

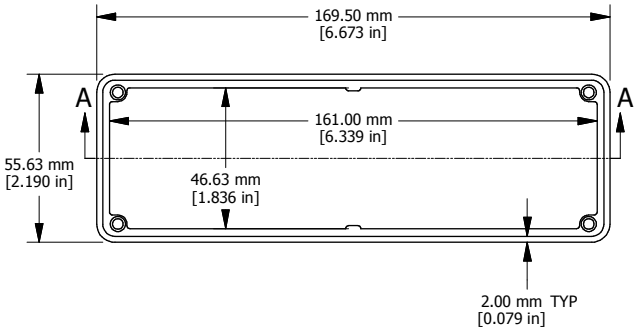

OPEN BEZEL

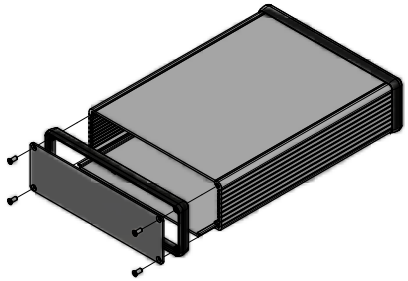

EXPLODED ASSEMBLY VIEW

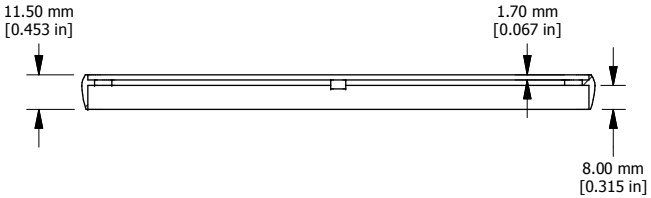

SECTION A-A

Enclosures can be Factory Modified (Milling, Drilling, Printing etc.)
Solid models of this enclosure available in STEP or IGES.
Contact Factory mjm@hammondmfg.com°

NOTE
Purchased assembly includes box, plastic bezels, end panels, #6 Taptight screws and self adhesive rubber feet.
Box made from Extruded Aluminum 6063.
Bezels made with polycarbonate.

1455T2201	
PART NUMBERS	
Clear Anodized	1455T2201
Black Anodized	1455T2201BK
Blue Anodized	1455T2201BU
Red Anodized	1455T2201RD
ACCESSORIES	
See website for accessories.	

HAMMOND MANUFACTURING™

1455T2201

www.hammondmfg.com