WALL MOUNT FOOT

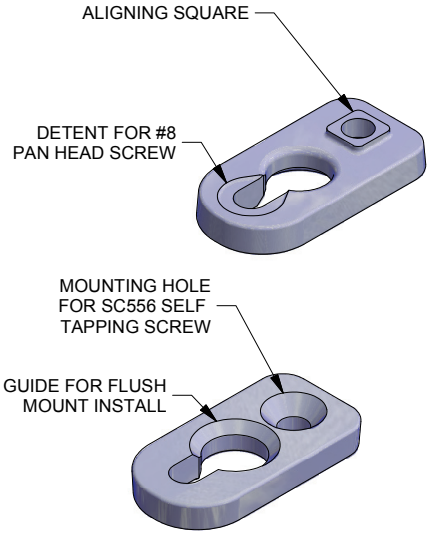

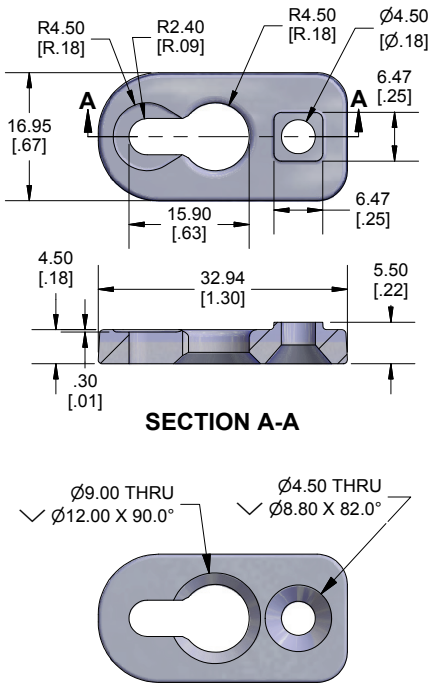

HEAVY DUTY MOUNT INSTALLATION

1. Install mounting feet to enclosure, using supplied screws with a torque of **Polycarbonate 100 - 110 cN-m or 8.8 - 9.7 lbf-in. ABS 80 - 90 cN-m or 7 - 8 lbf-in.**

2. Mount enclosure to object. Reccomend using #8 pan head screws **(not included)**.

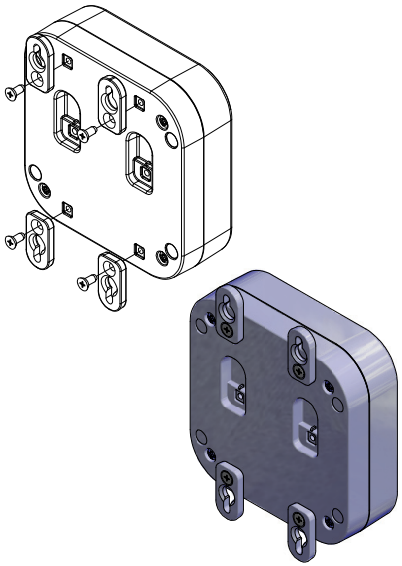

FLUSH MOUNT INSTALLATION

1. At the correct spacing for your enclosure, we recommend installing two #8 pan head screw **(not included)**,

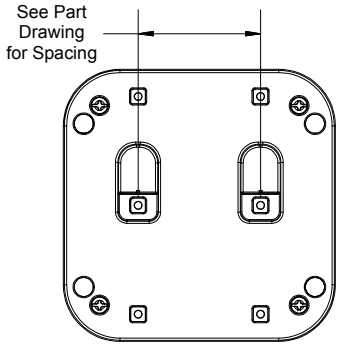

2. Using a mounting foot, set the height for the screw by loosely tightening the screw onto the foot. Remove foot and give the screw 1/4 turn more.

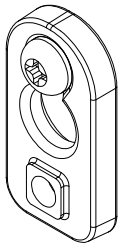

3. Install mounting feet to enclosure, using supplied screws with a torque of **Polycarbonate 100 - 110 cN-m or 8.8 - 9.7 lbf-in. ABS 80 - 90 cN-m or 7 - 8 lbf-in.**

4. Push enclosure onto installed screws. Press down on top of the enclosure till you feel the detent click over the pan head screw. some adjustment may be required.

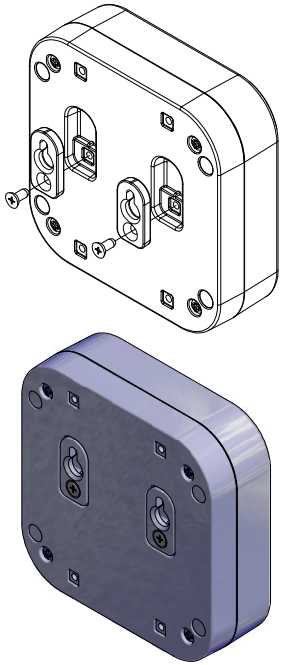

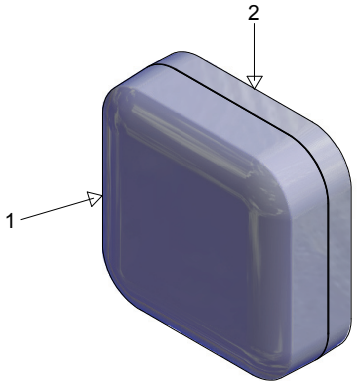

HAMMOND MANUFACTURING®
WALL MOUNT FOOT
INSTRUCTIONS
www.hammondmfg.com