FLUKE®

62 MAX/62 MAX +

Infrared Thermometer

Users Manual

PN 4060712
April 2012 Rev. 1, 11/12
© 2012 Fluke Corporation. All rights reserved. Printed in China.
Specifications are subject to change without notice.
All product names are trademarks of their respective companies.

LIMITED WARRANTY AND LIMITATION OF LIABILITY

This Fluke product will be free from defects in material and workmanship for three years from the date of purchase. This warranty does not cover fuses, disposable batteries, or damage from accident, neglect, misuse, alteration, contamination, or abnormal conditions of operation or handling. Resellers are not authorized to extend any other warranty on Fluke's behalf. To obtain service during the warranty period, contact your nearest Fluke authorized service center to obtain return authorization information, then send the product to that Service Center with a description of the problem.

THIS WARRANTY IS YOUR ONLY REMEDY. NO OTHER WARRANTIES, SUCH AS FITNESS FOR A PARTICULAR PURPOSE, ARE EXPRESSED OR IMPLIED. FLUKE IS NOT LIABLE FOR ANY SPECIAL, INDIRECT, INCIDENTAL OR CONSEQUENTIAL DAMAGES OR LOSSES, ARISING FROM ANY CAUSE OR THEORY. Since some states or countries do not allow the exclusion or limitation of an implied warranty or of incidental or consequential damages, this limitation of liability may not apply to you.

Fluke Corporation
P.O. Box 9090
Everett, WA 98206-9090
U.S.A.

Fluke Europe B.V.
P.O. Box 1186
5602 BD Eindhoven
The Netherlands

11/99

Table of Contents

Title	Page
Introduction	1
How to Contact Fluke	1
Safety Information	2
Maintenance	6
How to Change the Battery	6
How to Clean the Product	6
Specifications	7
Standards and Agency Approval	9
The Product	10

Introduction

The Fluke 62 MAX and 62 MAX + Infrared Thermometers (the Product) can determine the surface temperature by measuring the amount of infrared energy radiated by the target's surface. Note that the Japanese models indicate Celsius only.

⚠Warning

Read all safety information before you use the Product.

How to Contact Fluke

To contact Fluke, call one of the following telephone numbers:

- Technical Support USA: 1-800-44-FLUKE (1-800-443-5853)
- Calibration/Repair USA: 1-888-99-FLUKE (1-888-993-5853)
- Canada: 1-800-36-FLUKE (1-800-363-5853)
- Europe: +31 402-675-200
- Japan: +81-03-6714-3114
- Singapore: +65-6799-5655
- Anywhere in the world: +1-425-446-5500

Or, visit Fluke's website at www.fluke.com.

To register your product, visit http://register.fluke.com.

To see, print, or download the latest manual supplement, visit http://us.fluke.com/usen/support/manuals.

Safety Information

A **Warning** identifies conditions and procedures that are dangerous to the user. A **Caution** identifies conditions and procedures that can cause damage to the Product or the equipment under test.

Table 1 tells you about symbols used on the Product and in this manual.

Warning

To prevent eye damage and personal injury:

- **Read all safety Information before you use the Product.**
- **Do not use the Product if it operates incorrectly.**
- **Use the Product only as specified, or the protection supplied by the Product can be compromised.**
- **Before you use the Product, inspect the case. Do not use the Product if it appears damaged. Look for cracks or missing plastic.**

- **See emissivity information for actual temperatures. Reflective objects result in lower than actual temperature measurements. These objects pose a burn hazard.**
- **Do not look directly into the laser with optical tools (for example, binoculars, telescopes, microscopes). Optical tools can focus the laser and be dangerous to the eye.**
- **Do not look into the laser. Do not point laser directly at persons or animals or indirectly off reflective surfaces.**
- **Replace the batteries when the low battery indicator shows to prevent incorrect measurements.**
- **Do not use the Product around explosive gas, vapor, or in damp or wet environments.**
- **Use the Product only as specified or hazardous laser radiation exposure can occur.**

Table 1. Symbols

Symbol	Meaning	Symbol	Meaning
⚠	Risk of danger. Important information. See Manual.		This product complies with the WEEE Directive (2002/96/EC) marking requirements. The affixed label indicates that you must not discard this electrical/electronic product in domestic household waste. Product Category: With reference to the equipment types in the WEEE Directive Annex I, this product is classed as category 9 "Monitoring and Control Instrumentation" product. Do not dispose of this product as unsorted municipal waste. Go to Fluke's website for recycling information.

Table 1. Symbols (cont.)

Symbol	Meaning	Symbol	Meaning
	Warning. Laser.	CE	Conforms to European Union directives.
	Battery		Conforms to relevant Australian standards.
	Conforms to China Metrology Certification		

Maintenance

⚠Caution

To avoid damage to the Product, do not leave the thermometer on or near objects of high temperature.

How to Change the Battery

To install or change the AA IEC LR06 battery, open the battery compartment and replace the battery as shown in Figure 16.

How to Clean the Product

Use soap and water on a damp sponge or soft cloth to clean the Product case. Carefully wipe the surface with a moist cotton swab. The swab may be moistened with water. See Figure 17.

Specifications

	62 MAX	**62 MAX +**
Temperature Range	-30 °C to 500 °C (-22 °F to 932 °F)	-30 °C to 650 °C (-22 °F to 1202 °F)
Accuracy (Calibration geometry with ambient temperature 23 °C ±2 °C)	≥0 °C: ±1.5 °C or ±1.5 % of reading, whichever is greater (≥32 °F: ±3 °F or ±1.5 % of reading, whichever is greater) ≥ -10 °C to <0 °C: ±2 °C (≥14 °F to <32 °F: ±4 °F) < -10 °C: ±3 °C (<14 °F: ±6 °F)	≥0 °C: ±1 °C or ±1 % of reading, whichever is greater (≥32 °F: ±2 °F or ±1 % of reading, whichever is greater) ≥ -10 °C to <0 °C: ±2 °C (≥14 °F to <32 °F: ±4 °F) < -10 °C: ±3 °C (<14 °F: ±6 °F)
Response Time (95 %)	<500 ms (95 % of reading)	<300 ms (95 % of reading)
Spectral Response	8 to 14 microns	
Emissivity	0.10 to 1.00	
Temperature Coefficient	±0.1 °C/°C or ±0.1 %/°C of reading (whichever is greater)	

Optical Resolution	10:1 (calculated at 90 % energy)	12:1 (calculated at 90 % energy)
Display Resolution	0.1 °C (0.2 °F)	
Repeatability (% of reading)	±0.8 % of reading or ±1.0 °C (2 °F), whichever is greater	±0.5 % of reading or ±0.5 °C (1 °F), whichever is greater
Power	1 AA IEC LR06 Battery	
Battery Life	10 hours with laser and backlight on	8 hours with laser and backlight on
Weight	255 g (8.99 oz)	
Size	(175 x 85 x 75) mm (6.88 x 3.34 x 2.95) inches	
Operating Temperature	0 °C to 50 °C (32 °F to 122 °F)	
Storage Temperature	-20 °C to 60 °C (-4 °F to 140 °F), (without battery)	
Operating Humidity	10 % to 90 % RH non-condensing @ 30 °C (86 °F)	
Operating Altitude	2000 meters above mean sea level	
Storage Altitude	12,000 meters above mean sea level	

Ingress Protection Rating	IP 54 per IEC 60529
Drop Test	3 meters
Vibration and Shock	IEC 60068-2-6 2.5 g, 10 to 200 Hz, IEC 60068-2-27, 50 g, 11 ms
EMC	EN 61326-1:2006 EN 61326-2:2006

Standards and Agency Approval

Compliance ..... EN/IEC 61010-1
Laser Safety ..... EN 60825-1 Class 2
Implement Standard Q/SXAV37

The Product

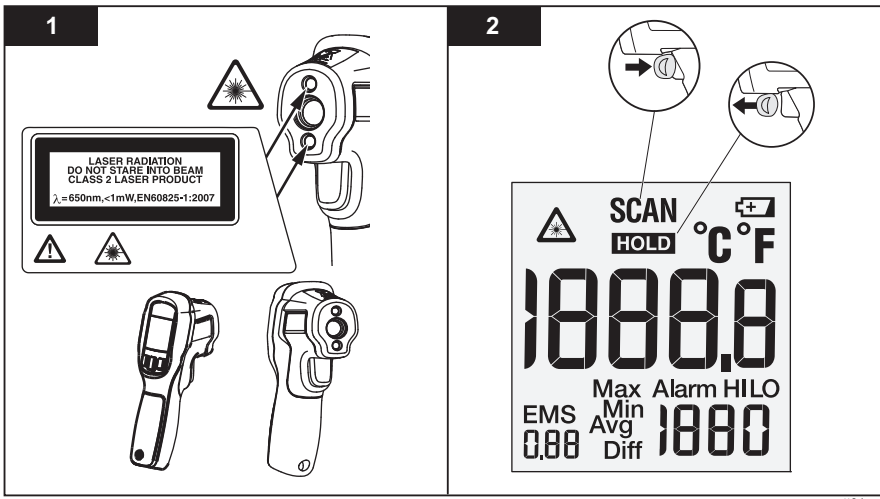

gtt01.eps

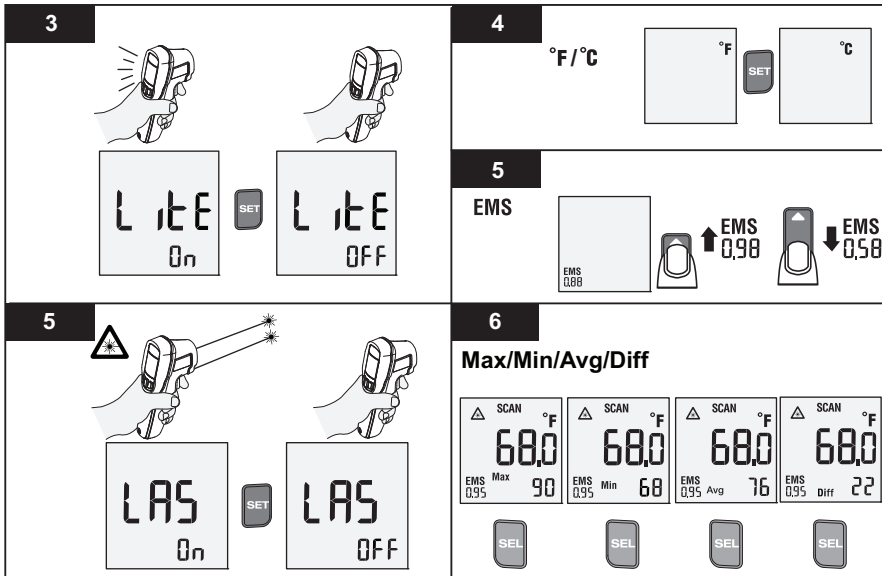
3
LitE
On
SET
LitE
OFF
4
°F/°C
°F
SET
°C
5
EMS
EMS
0,88
EMS
0,98
EMS
0,58
5
LAS
On
SET
LAS
OFF
6
Max/Min/Avg/Diff
SCAN
°F
68,0
EMS
0,95
Max
90
SCAN
°F
68,0
EMS
0,95
Min
68
SCAN
°F
68,0
EMS
0,95
Avg
76
SCAN
°F
68,0
EMS
0,95
Diff
22
SEL
SEL
SEL
SEL

gtt14.eps

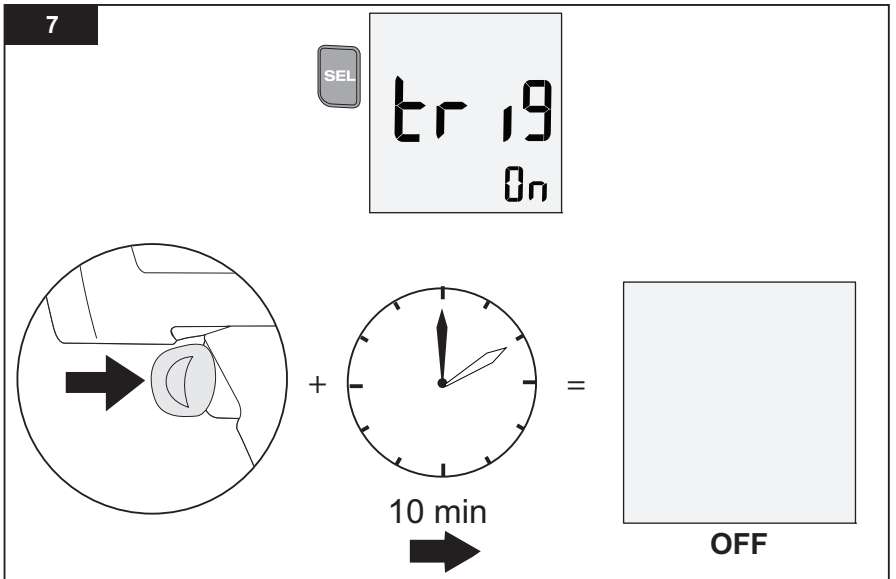

gtt16.eps

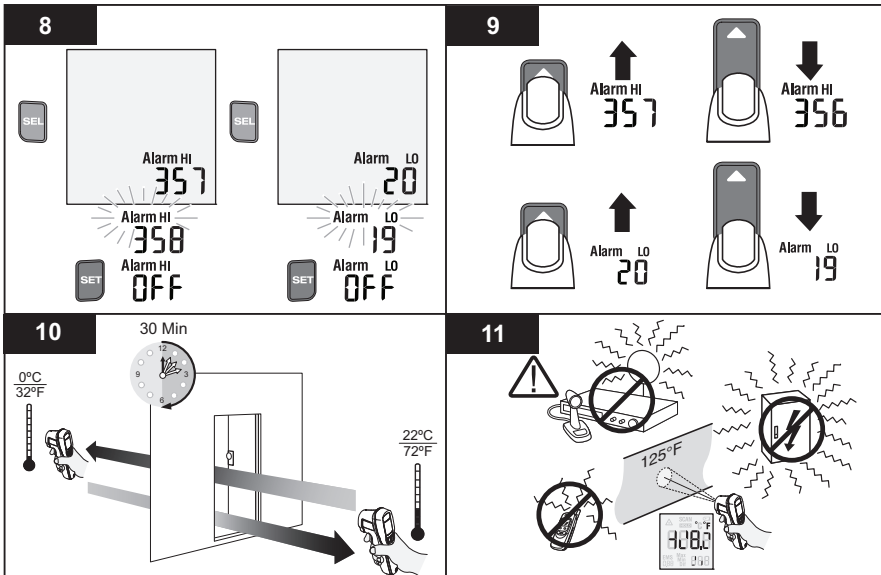
8
SEL
SEL
Alarm HI
357
Alarm HI
358
SET
Alarm HI
OFF
Alarm LO
20
Alarm LO
19
SET
Alarm LO
OFF
9
Alarm HI
357
Alarm HI
356
Alarm LO
20
Alarm LO
19
10
30 Min
0ºC
32ºF
22ºC
72ºF
11
125°F

gtt15.eps

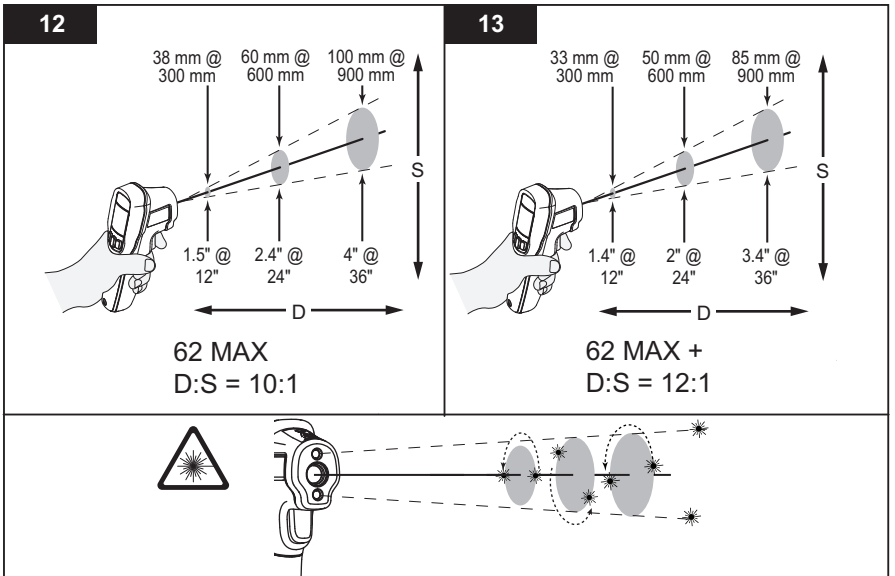
12
38 mm @ 300 mm
60 mm @ 600 mm
100 mm @ 900 mm
S
1.5" @ 12"
2.4" @ 24"
4" @ 36"
D
62 MAX
D:S = 10:1
13
33 mm @ 300 mm
50 mm @ 600 mm
85 mm @ 900 mm
S
1.4" @ 12"
2" @ 24"
3.4" @ 36"
D
62 MAX +
D:S = 12:1
gtt08-11.eps

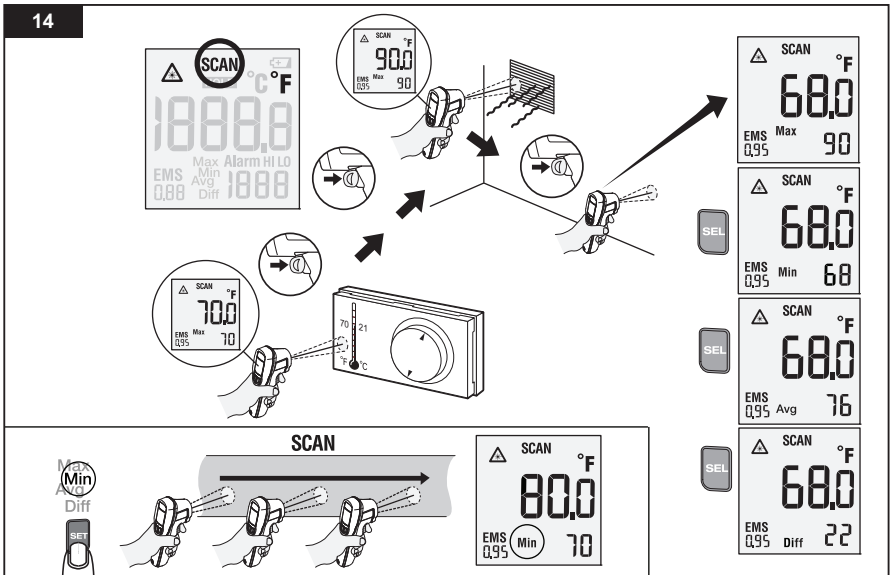
14
SCAN
°C
°F
1888.8
Max
Alarm HI LO
EMS
0.88
Min
Avg
Diff
1888
SCAN
°F
90.0
EMS
0.95
Max
90
SCAN
°F
70.0
EMS
0.95
Max
70
70
21
°F
°C
SCAN
°F
68.0
EMS
0.95
Max
90
SEL
SCAN
°F
68.0
EMS
0.95
Min
68
SEL
SCAN
°F
68.0
EMS
0.95
Avg
76
SEL
SCAN
°F
68.0
EMS
0.95
Diff
22
Max
Min
Avg
Diff
SET
SCAN
SCAN
°F
80.0
EMS
0.95
Min
70

gtt03.eps

15

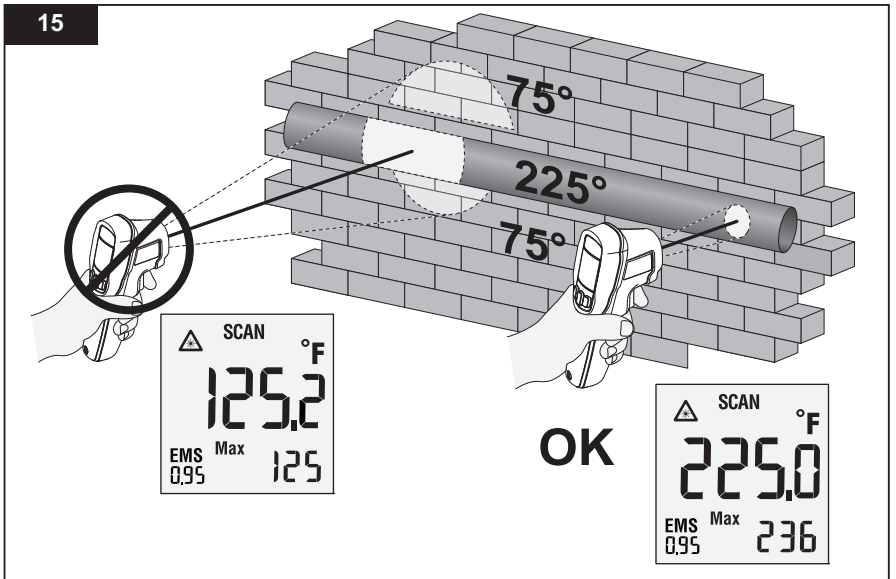
75°
225°
75°
SCAN
°F
125.2
EMS
0.95
Max
125
OK
SCAN
°F
225.0
EMS
0.95
Max
236

gtt04.eps

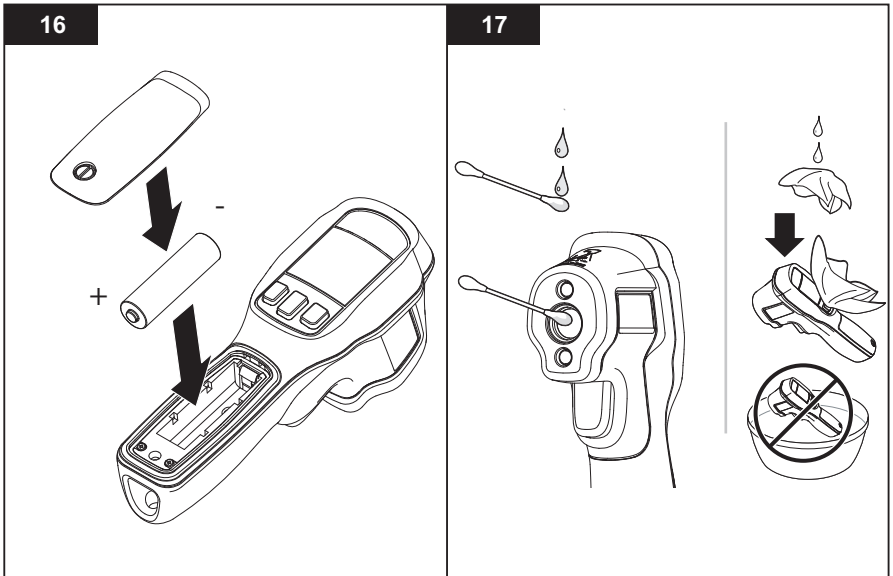

gtt13.eps