KSTC	SPECIFICATION AND PERFORMANCE	TYPE OF PRODUCT
		KR1.00MLW5B

1.00MHz Lead Type

1. Scope :

This specification shall cover the characteristics of the ceramic resonator with 1000KHz for the clock oscillation of microprocessor etc.

2. Electric Specification :

2-1.	Nominal oscillation frequency	(Fo)	: 1000KHz
2-2.	Frequency initial tolerance		: ± 0.5%
2-3.	Resonator impedance	(Ro)	:100Ω max.
2-4.	Withstanding voltage		:100V D.C. 5 sec. max.
2-5.	Rate working voltage		
1).	D.C. voltage		:6V D.C.
2).	A.C. voltage		:15 Vp-p
2-6.	Temperature coefficient of oscillation frequency		: ±0.3% max. (-20 to +80℃)
2-7.	Operating temperature		: -20 to +80℃
2-8.	Storage temperature		: -40 to+80℃
2-9	Shipping temperature		: -40 to +80℃
2-10.	Aging for 10 years		:± 0.3% max.

3. Dimension:

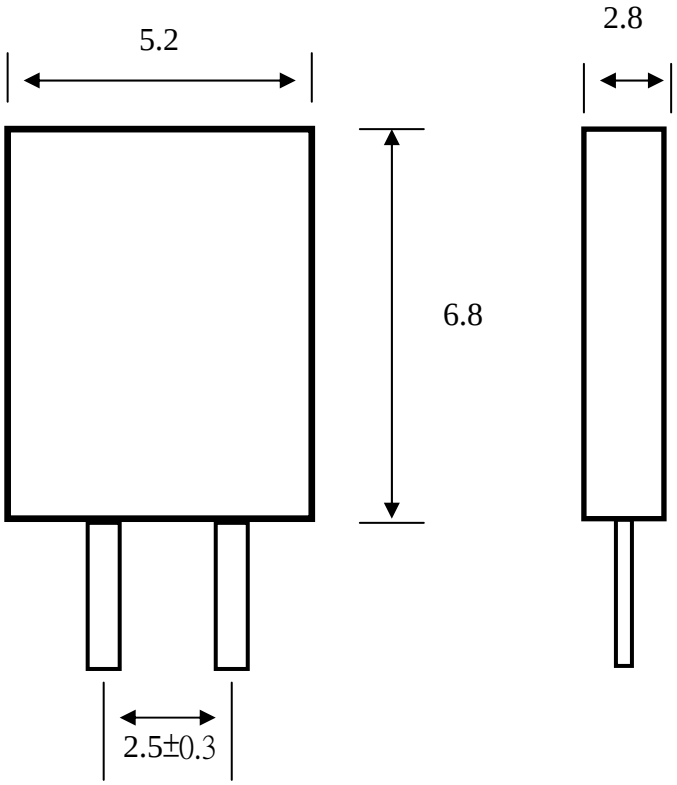

(in mm)

MARK :

4. Measurement

4-1 Measurement Condition

The reference temperature shall be 25℃± 2℃ 。The measurement shall be performed at the temperature range of 5℃to 35℃ unless otherwise the result is doubtful。

4-2 Measurement Circuit and Equipment

Oscillating frequency shall be measured by the standard test circuit as shown in fig.1。

Resonant impedance shall be measured by Network Analyzer HP E5100A。

∗ Test Circuits

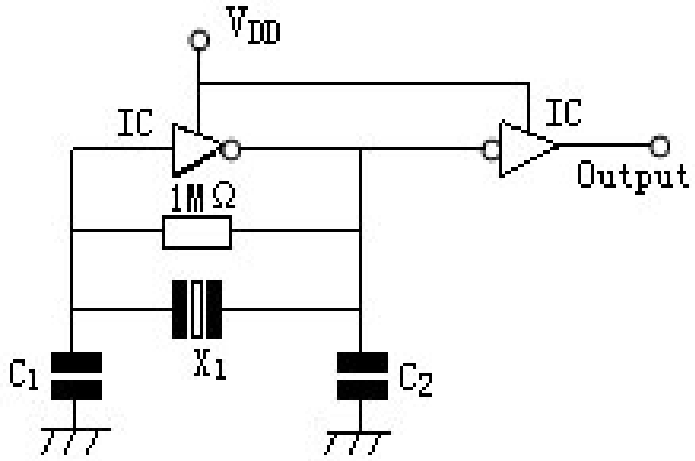

IC：1/6TC4069UBPx2

C1=C2：100pF

X1 ：陶瓷振蕩器 Ceramic Resonator

V_{DD} ：+5V

5. Physical And Environmental Characteristics :

Electrical Performance

Item	Condition Of Test	Performance Requirements
5-1. Humidity	Keep the resonator at 40℃± 2℃and 90%- 95% RH for 96±4 hours. Then release the resonator into the room conditions for 1 hour prior to the measurement.	It shall fulfill the specifications in table 1。
5-2. High Temperature Exposure	Subject the resonator to 80℃± 5℃ for 96±4 hours．Then release the resonator into the room conditions for 1 hour prior to the measurement．	It shall fulfill the specifications in table 1。
5-3.Low Temperature	Subject the resonator to -20℃± 5℃ for 96±4 hours．Then release the resonator into the room conditions for 1 hour prior to the measurement．	It shall fulfill the specifications in table 1。
5-4. Mechanical Shock	Drop the resonator randomly onto a concrete floor from the height of 100cm 3 times．	It shall fulfill the specifications in table 1。
5-5. Temperature Cycling	Subject the resonator to -20℃ for 30 min. followed by a high temperature of +80℃ for 30 min. Cycling shall be repeated 5 times with a transfer time of 15 sec. at the room condition. Then release the resonator into the room temperature for 1 hour prior to the measurement.	It shall fulfill the specifications in table 1。
5-6. Vibration	Subject the resonator to vibration for 2 hours each in x, y, and z axes with the amplitude of 1.5mm, the frequency shall be varied uniformly between the limits of 10-55 Hz．	It shall fulfill the specifications in table 1。

5-7. Resistance to Solder Heat	Dip the resonator terminals no closer than 2 mm into the solder bath 260℃±5℃for 10±1 sec; Then release the resonator into the room temperature for 1 hour prior to the measurement .	It shall fulfill the specifications in table 1。
5-8. Solder Ability	Dip the resonator terminals no closer than 2 mm into the solder bath at 235℃± 5℃ for 3±0.5 sec. . more than 95%of the terminal surface of the resonator shall be covered with fresh solder。	More than 95% of the terminal surface of the resonator shall be covered with fresh solder.
5-9. Lead Fatigue		
1) Pulling Test	Weight along with the direction of terminals without any shock 0.5kg for 10±1sec.。	The resonator shall show no evidence of damage and shall fulfill all the initial electric characteristics.
2) Bending Test	Lead shall be subject to withstand against 90 degree bending at its stem・This operation shall be done towards both direction。	

Table 1

Item	Specification
Oscillation Frequency Change	△F/Fosc≦(+0.2/-0.4)%max.
Resonator Impedance	△Ro≦5Ω

6. Review Of Specification

When something get doubtful with this specifications，we shall jointly work to get an agreement。