Key-operated actuators, Flat Front, not suitable for master key systems, 2 positions, momentary, MS2

Powering Business Worldwide

Part no. M30C-FWS-MS2
Catalog No. 187073
Eaton Catalog No. M30C-FWS-MS2

Delivery program

Product range			RMQ-Titan
Basic function			Key-operated buttons
Single unit/Complete unit			Single unit
Design			key operation lock mechanism
			momentary
Function:			
			40°
			Not suitable for master key systems
			2 positions
Lock mechanism			MS2
Key withdrawable in position			
			0
Degree of Protection			IP64
Front ring			Metal bezel
Connection to SmartWire-DT			Yes, with SWD-RMQ connections
Actuator travel and actuation force as per DIN EN 60947-5-1, K.5.4.1			
Minimum force for positive opening	N		0
Front dimensions			Ø 36 mm
Instructions			Stay-put/spring-return function, can be changed with coding parts M22-XC-Y Key withdraw convertible with coding adapters M22-XC-...
Information about equipment supplied			With 1 key

Technical data

General

Standards			IEC/EN 60947 VDE 0660
Lifespan, mechanical	Operations	x 10^6	> 0.1
Operating frequency	Operations/h		≤ 100
Operating torque		Nm	≤ 0.5
Climatic proofing			Damp heat, constant, to IEC 60068-2-78 Damp heat, cyclic, to IEC 60068-2-30
Degree of Protection			IP64
Ambient temperature			
Open		°C	-25 - +70
Mounting position			As required
Mechanical shock resistance		g	15 Shock duration 11 ms Sinusoidal according to IEC 60068-2-27

Design verification as per IEC/EN 61439

Technical data for design verification			
Operating ambient temperature min.		°C	-25
Operating ambient temperature max.		°C	70

Technical data ETIM 6.0

Low-voltage industrial components (EG000017) / Front element for selector switch (EC000222)

Electric engineering, automation, process control engineering / Low-voltage switch technology / Command and alarm device / Front element for selector switches (ecl@ss8.1-27-37-12-13 [AKF031011])			
Number of switch positions			2
Type of control element			Key
Suitable for illumination			No
Colour control element			Black
Colour indicator light cap			Not applicable
Construction type lens			Round
Hole diameter		mm	30
Width opening		mm	0
Height meter opening		mm	0
Switching function latching			No
Spring-return			Yes
Degree of protection (IP), front side			IP66
With front ring			Yes
Material front ring			Metal
Colour front ring			Chrome

Dimensions

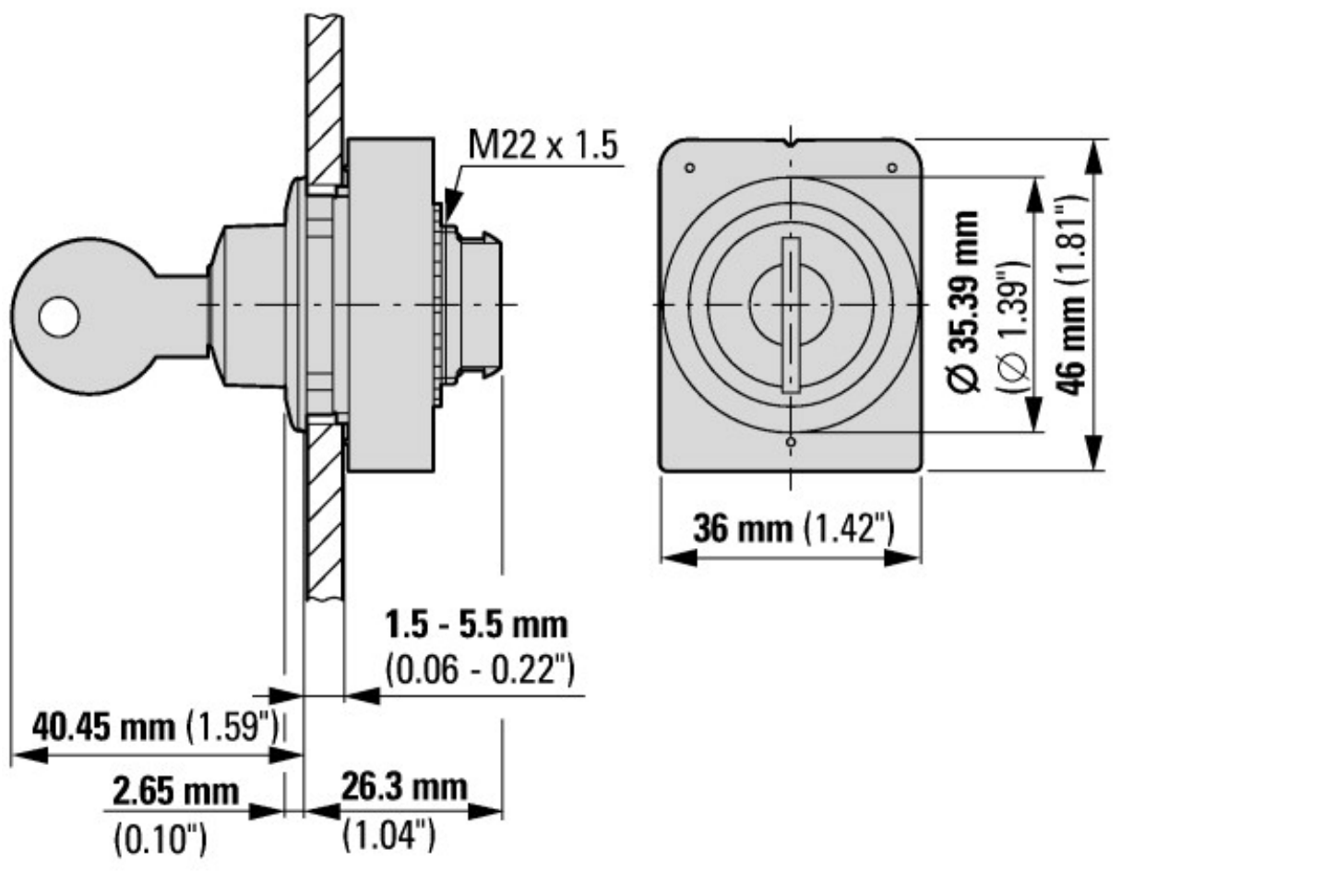

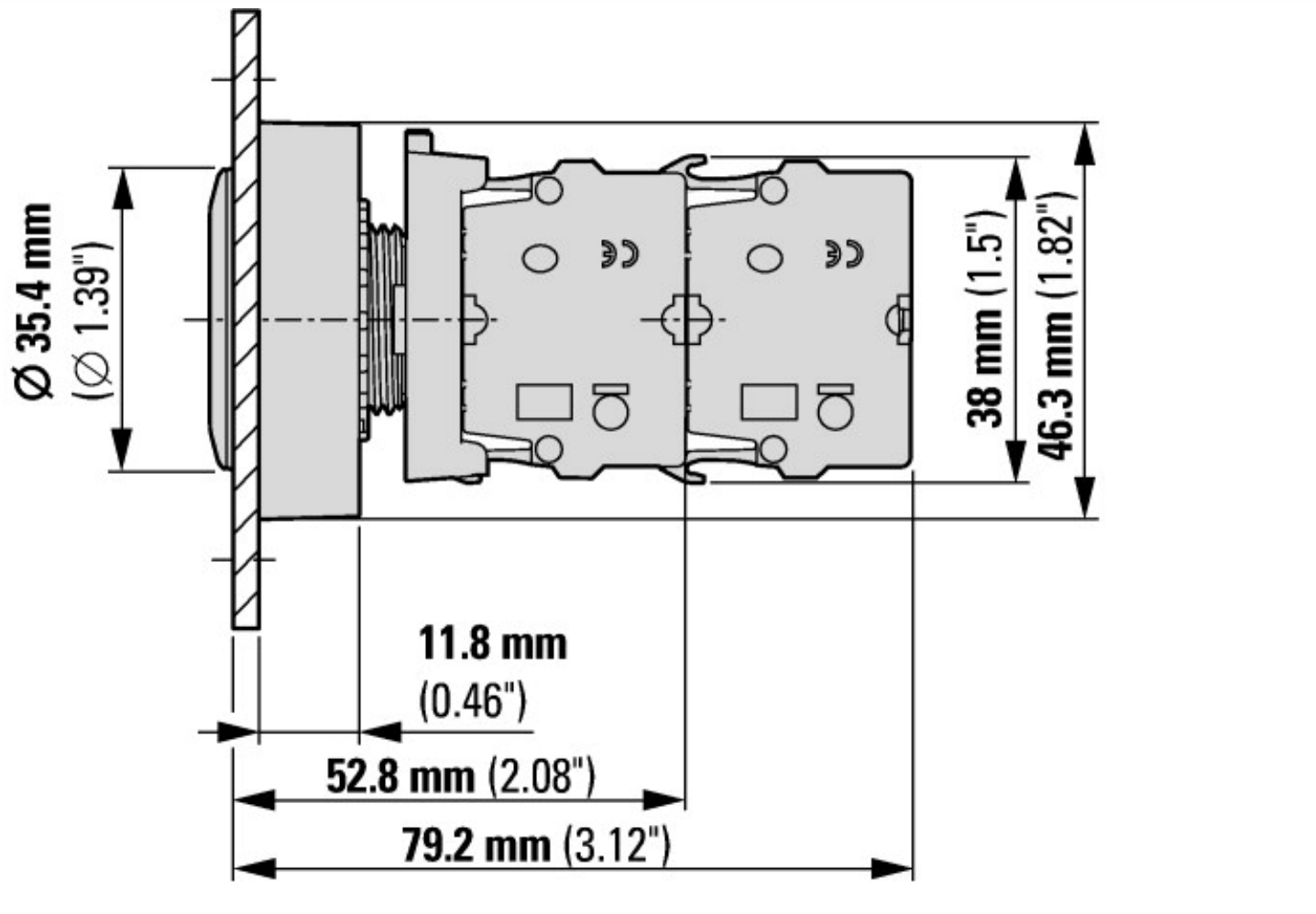

with 2 M22-K… standard contact elements

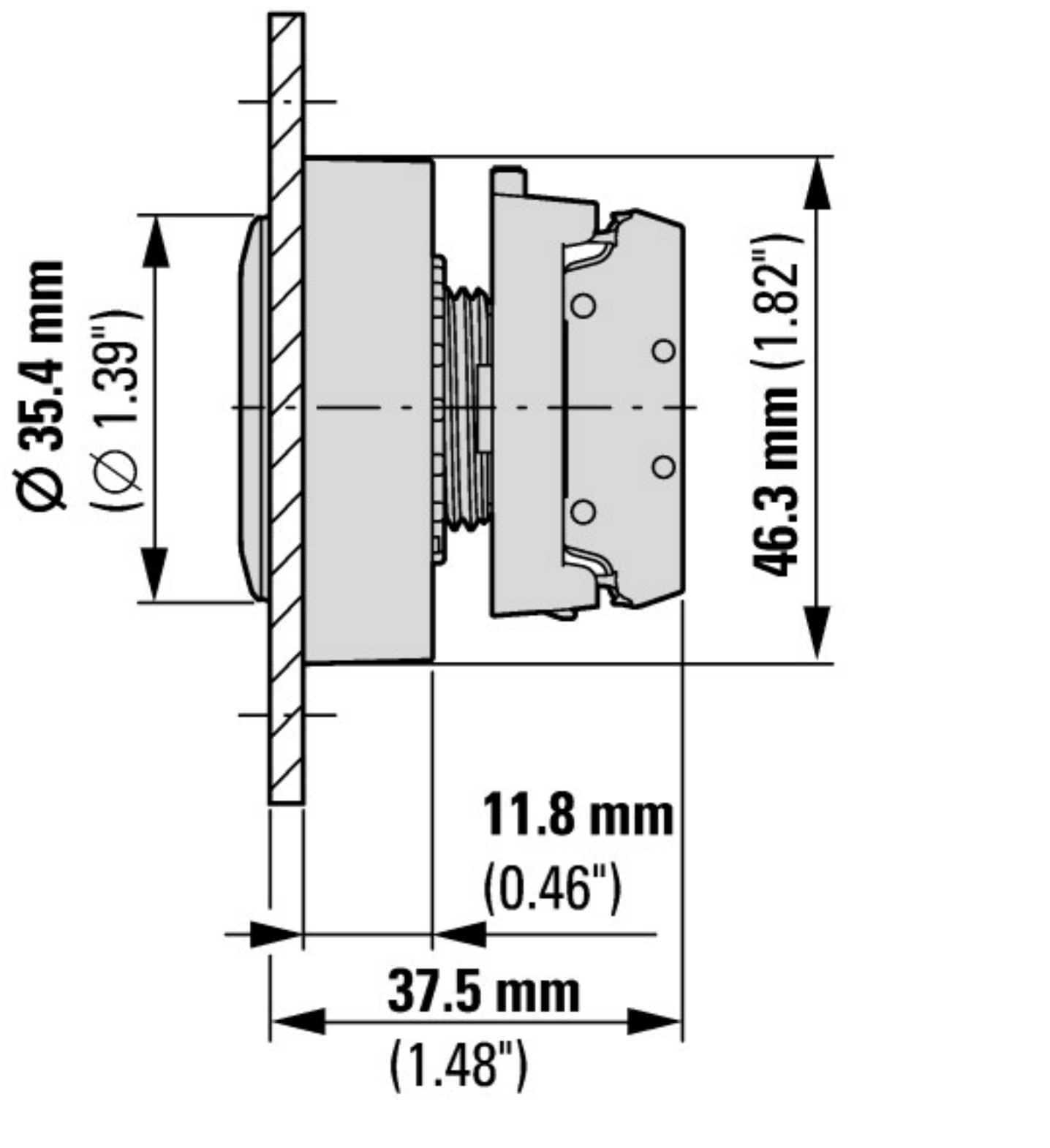

with M22-FK… flat rear contact elements

Additional product information (links)

IL047019ZU Flat Front	
IL047019ZU Flat Front	ftp://ftp.moeller.net/DOCUMENTATION/AWA_INSTRUCTIONS/IL047019ZU2017_02.pdf

© 08/2017 by Eaton Industries GmbH