PCB Terminal Blocks

5.0mm pitch

SPECIFICATION:

Material

Screws	M2.5 Steel, Zinc Plated
Pin Header	Brass, Tin Plated
Housing	PA66, UL94V-0
Shrapnel	Phosphore Bronze, Ni Plated

Electrical

Standard	IEC	
Rated Voltage	250V	250V
Rated Current	16A	17.5A
Wire Range	22-14AWG	0.34-1.5mm²
Contact Resistance	20mΩ	
Insulation Resistance	500MΩ/DC500V	
Withstand Voltage	AC2000V/1Min	

Mechanical

Temperature Range	-40°C~+120°C
Max. Soldering	+250°C for 5 sec
Strip Length	4-4.5mm
Torque	0.4Nm (3.6Lb.in)

Size
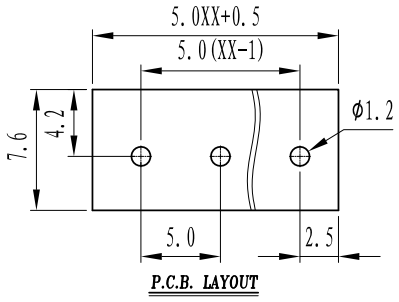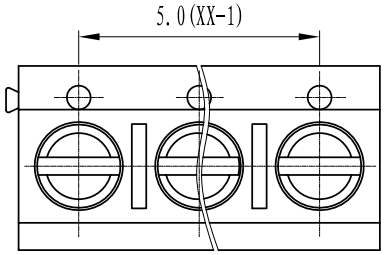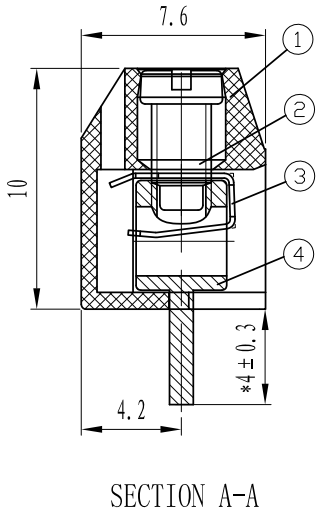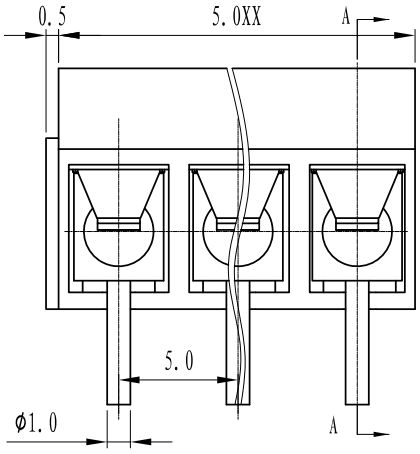
Pitch	5.0mm (.197")
Poles	2P-12P