RND components

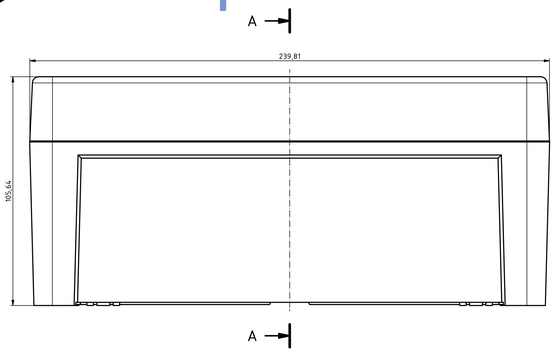

A-A (1 : 1)

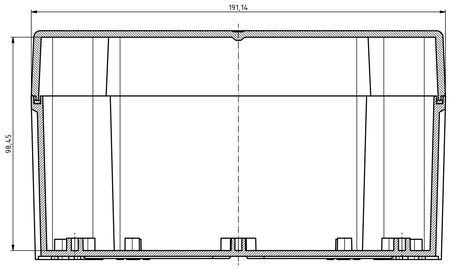

ISO (1 : 1)

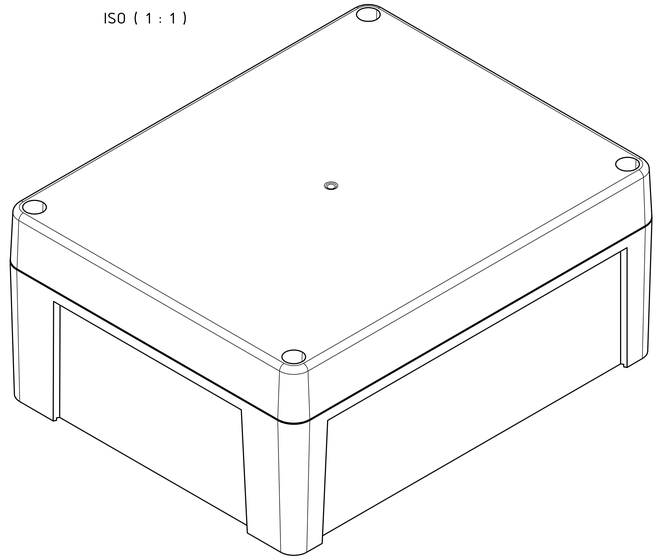

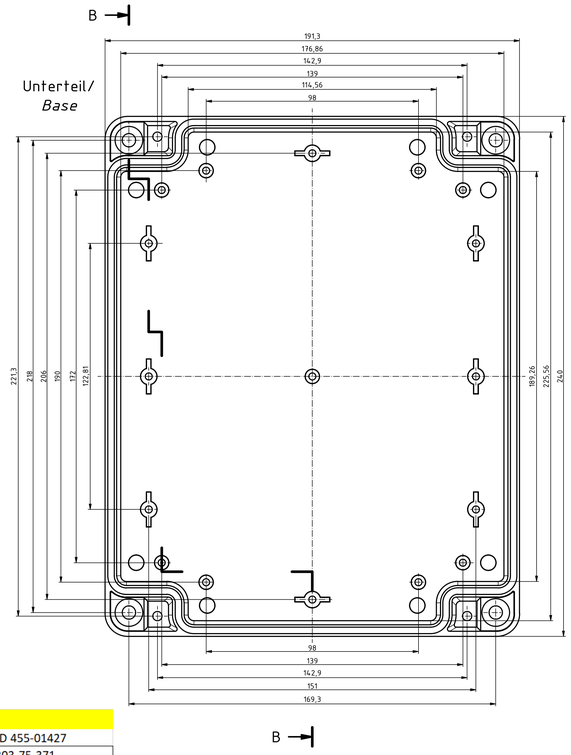

B-B (1 : 1)

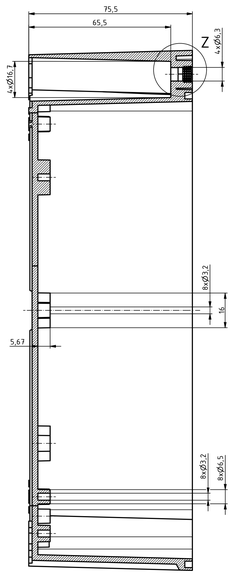

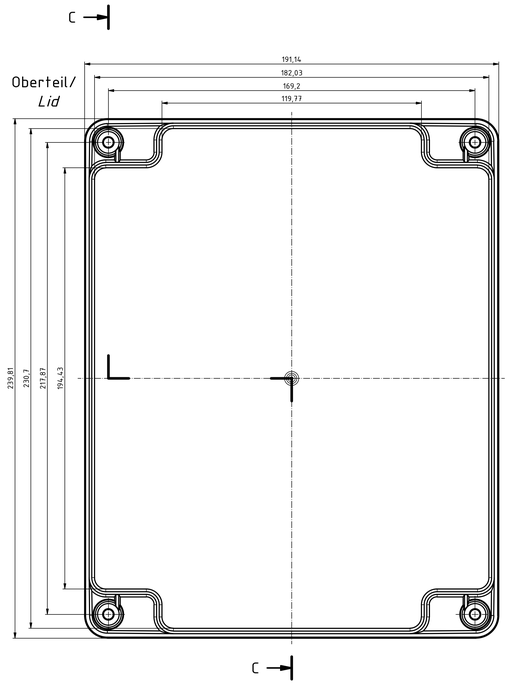

C-C (1 : 1)

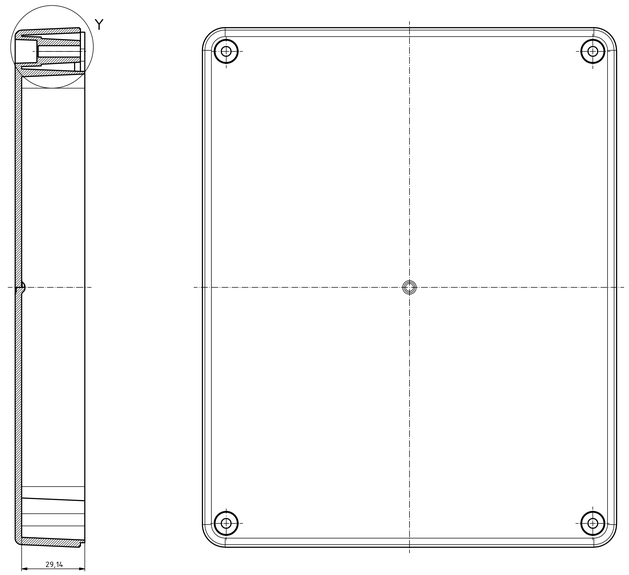

SPECIFICATION	
RND NUMBER	RND 455-01427
Distrelec NUMBER	303-75-371
RND BAR CODE NUMBER	0653415230519
Product text English	Enclosure ABS-PC GREY. transp. lid. IP65
Outer Dimensions	240 x 191.3 x 105.6mm
Inner dimension length	189.3 x 176.9 x 98.4mm
Material	ABS & Polycarbonate
Colour	light grey. similar to RAL 7035
Lid	Transparent
Wall brackets	N/A
Colour	light grey. similar to RAL 7035
Protection class	IP65 IK07

Z (2 : 1)

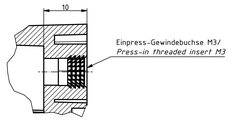

Y (2 : 1)

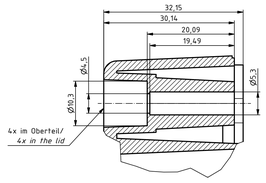

For Version with enclosed gasket
Protection class IP40. To achieve protection class IP65,
the enclosed gasket must be mounted correctly. The gasket must not be stretched or compressed in the corners. Ends cut obliquely and glued, so that the cut ends are pressed together by the spring pressure.