AC Power Cable

Features

- Integral lead with a non-terminated end
- The plug and lead assembly has a 2 core 0.75 mm² harmonised cable
- Each individual conductor is stripped

Specification

Connector A	Euro Male
Connector B	Open End
Connector Orientation	Straight
Cross-Section	0.75 mm²
Current Rating	2.5 A
Jacket Colour	White
Jacket Material	PVC
Length (L)	2 m
Voltage Rating Max.	250 V

Drawing

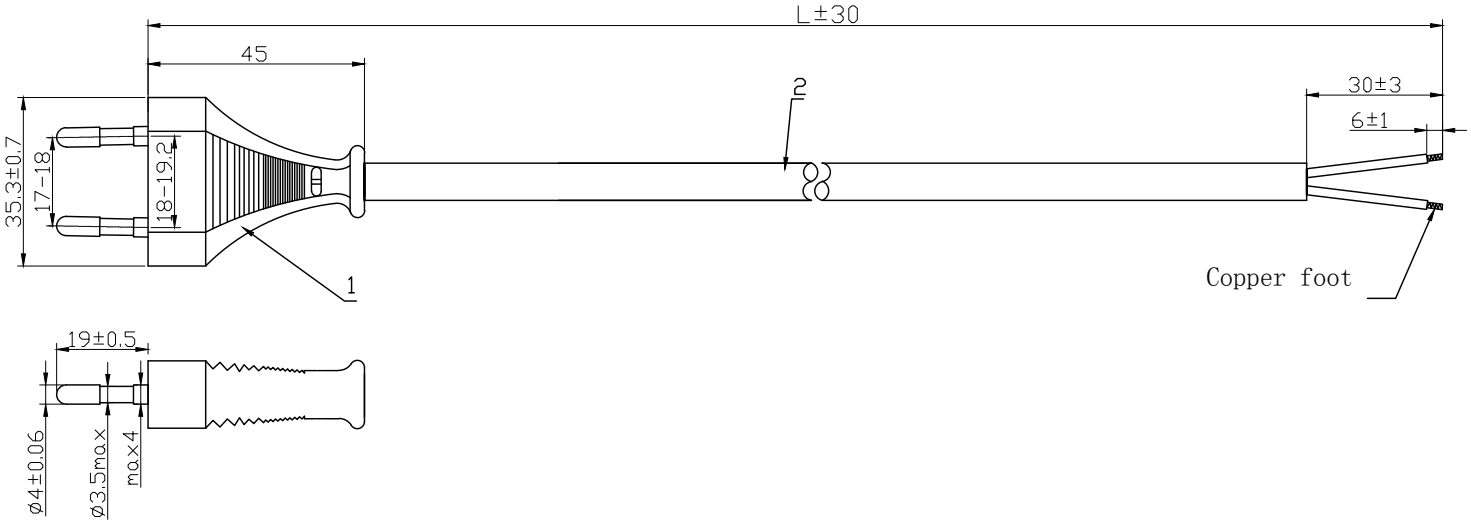

Notes:

1.Cable:H03VV2-F 2*0.75²mm Jacket 3.5±0.1*5.7±0.1 Conductor 24*0.198

2.Mark: ◁ VDE ▷ H03VVH2-F 2*0.75mm²

3.Test:Hi-pot: Inner Voltage AC2500V/1S , External Voltage AC4500V/1S
current leakage 1mA, insulation resistance no less than 50M Ω, no strike out;

Art. Nr.
RND 465-01015

RND is a trademark of Distrelec