Product datasheet

Specifications

Discontinued

servo motor BMH - 2.5 Nm - 8000 rpm - untapped shaft - with brake - IP54

BMH0702P06F2A

Discontinued on: 9 Feb 2023

EAN Code: 3606485193793

Main

Device short name	BMH
Product or component type	Servo motor
Maximum mechanical speed	8000 rpm
Continuous stall torque	2.5 N.m for LXM32.D12N4 at 3 A, 400 V, three phase 2.5 N.m for LXM32.D12N4 at 3 A, 480 V, three phase
Peak stall torque	7.4 N.m for LXM32.D12N4 at 3 A, 400 V, three phase 7.4 N.m for LXM32.D12N4 at 3 A, 480 V, three phase
Nominal output power	700 W for LXM32.D12N4 at 3 A, 400 V, three phase 700 W for LXM32.D12N4 at 3 A, 480 V, three phase
Nominal torque	2.2 N.m for LXM32.D12N4 at 3 A, 400 V, three phase 2.2 N.m for LXM32.D12N4 at 3 A, 480 V, three phase
Nominal speed	3000 rpm for LXM32.D12N4 at 3 A, 400 V, three phase 3000 rpm for LXM32.D12N4 at 3 A, 480 V, three phase
Product compatibility	LXM32.D12N4 at 400...480 V three phase
Shaft end	Smooth shaft
IP degree of protection	IP54 standard
Speed feedback resolution	32768 points/turn
Holding brake	With
Mounting support	International standard flange
Electrical connection	Rotatable right-angled connectors

Complementary

Range compatibility	Lexium 32
[Us] rated supply voltage	480 V
Network number of phases	Three phase
Continuous stall current	2.94 A
Continuous power	1.51 W
Maximum current Irms	9.65 A for LXM32.D12N4
Maximum permanent current	9.68 A
Second shaft	Without second shaft end
Shaft diameter	11 mm
Shaft length	23 mm
Feedback type	Single turn SinCos Hiperface

Disclaimer: This documentation is not intended as a substitute for and is not to be used for determining suitability or reliability of these products for specific user applications

Holding torque	3 N.m holding brake
Motor flange size	70 mm
Number of motor stacks	2
Torque constant	0.84 N.m/A at 120 °C
Back emf constant	54.08 V/krpm at 120 °C
Number of motor poles	5.0
Rotor inertia	1.24 kg.cm²
Stator resistance	3.8 Ohm at 20 °C
Stator inductance	5.89 mH at 20 °C
Stator electrical time constant	3.2 ms at 20 °C
Maximum radial force Fr	710 N at 1000 rpm 560 N at 2000 rpm 490 N at 3000 rpm 450 N at 4000 rpm 410 N at 5000 rpm 390 N at 6000 rpm
Maximum axial force Fa	0.2 x Fr
Brake pull-in power	7 W
type of cooling	Natural convection
Length	193 mm
Centring collar diameter	60 mm
centring collar depth	2.5 mm
Number of mounting holes	4
Mounting holes diameter	5.5 mm
Circle diameter of the mounting holes	82 mm
Net weight	3.3 kg
Sizing reference	BMH0702P
Network number of phases	3
Accuracy error [angular]	4.8 °
Temperature copper hot	135 °C
Temperature magnet hot	100 °C
Temperature magnet rt	20 °C

Packing Units

Unit Type of Package 1	PCE
Number of Units in Package 1	1
Package 1 Height	11.500 cm
Package 1 Width	19.300 cm
Package 1 Length	39.800 cm
Package 1 Weight	3.348 kg

Contractual warranty

Warranty	18 months

Environmental Data

Schneider Electric aims to achieve Net Zero status by 2050 through supply chain partnerships, lower impact materials, and circularity via our ongoing “Use Better, Use Longer, Use Again” campaign to extend product lifetimes and recyclability.

Environmental Data explained >

How we assess product sustainability >

Environmental footprint

Carbon footprint (kg.eq.CO2 per CR, Total Life cycle)	789
Environmental Disclosure	Product Environmental Profile

Use Better

Materials and Substances

Packaging made with recycled cardboard	Yes
Packaging without single use plastic	No
EU RoHS Directive	Pro-active compliance (Product out of EU RoHS legal scope)
SCIP Number	A7df881f-135f-4256-b8c2-ea55d4c9a151
REACh Regulation	REACh Declaration
PVC free	Yes

Use Again

Repack and remanufacture

Circularity Profile	No need of specific recycling operations
Take-back	No
WEEE	The product must be disposed on European Union markets following specific waste collection and never end up in rubbish bins

Dimensions Drawings

Servo Motors Dimensions

Example with Straight Connectors

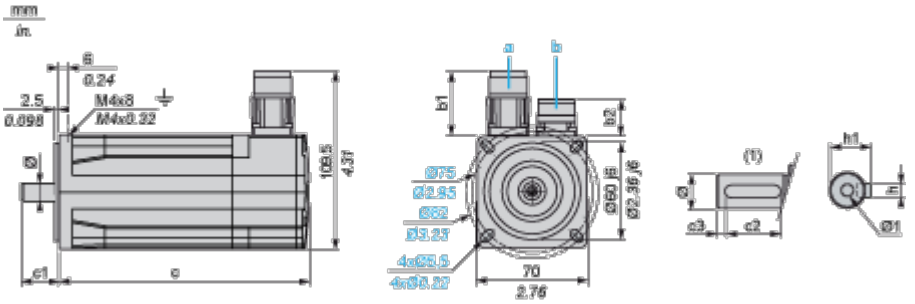

a: Power supply for servo motor brake

b: Power supply for servo motor encoder

(1) Shaft end, keyed slot (optional)

Dimensions in mm

Straight connectors		Rotatable angled connectors		c (without brake)	c (with brake)	c1	c2	c3	h	h1	Ø	Ø1 for screws
b1	b2	b1	b2									
39.5	25.5	39.5	39.5	154	193	23	18	2.5	4 h9	$12.5^{+0}_{-0.13}$	11 k6	M4 x 14

Dimensions in in.

Straight connectors		Rotatable angled connectors		c (without brake)	c (with brake)	c1	c2	c3	h	h1	Ø	Ø1 for screws
b1	b2	b1	b2									
1.55	1	1.55	1.55	6.06	7.59	0.90	0.70	0.09	0.16 h9	$0.49^{+0}_{-0.0051}$	0.43 k6	M4 x 0.55

Performance Curves

400 V 3-Phase Supply Voltage

Torque/Speed Curves

Servo motor with LXM32•D12N4 servo drive

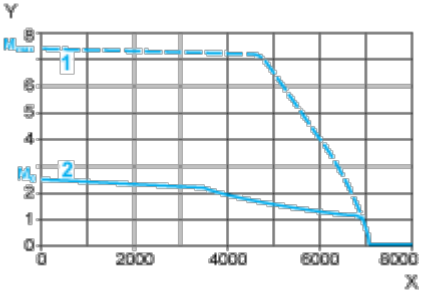

X Speed in rpm

Y Torque in Nm

1 Peak torque

2 Continuous torque

480 V 3-Phase Supply Voltage

Torque/Speed Curves

Servo motor with LXM32•D12N4 servo drive

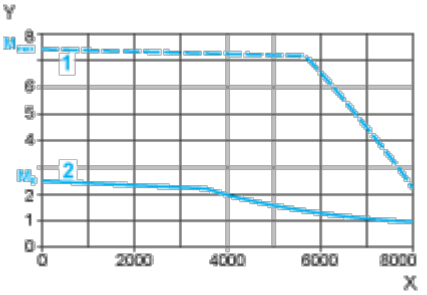

X Speed in rpm

Y Torque in Nm

1 Peak torque

2 Continuous torque