2-Colour Display
Digital Flow Switch

Applicable fluid Air, N_2

New

(200 L type only)

RoHS

Expanded flow range! Wide range of flow measurement with one product

Flow ratio* **(100: 1)**

* Flow ratio is 10: 1 for current PF2A.

Setting resolution: 1 L/min

Current PF2A: 5 L/min (200 L: 2 L/min)

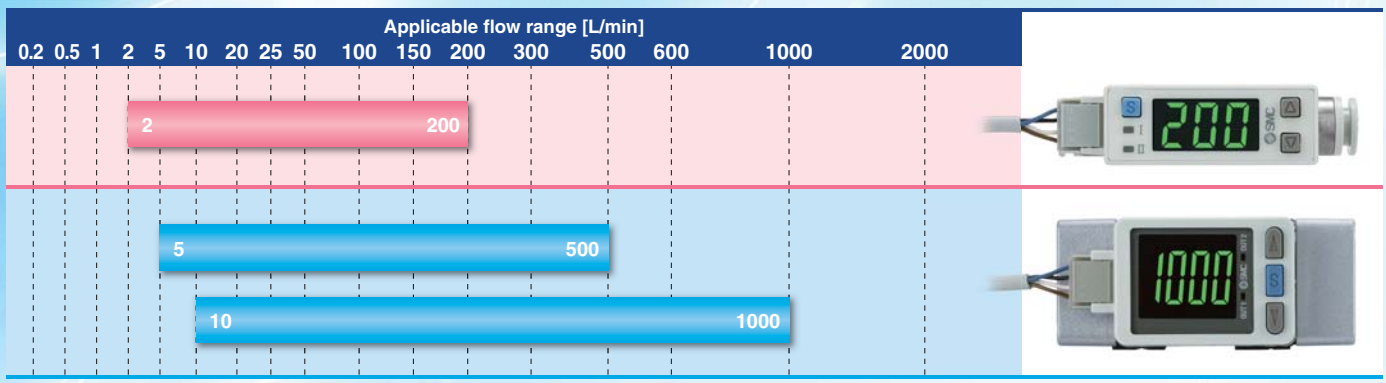

Compact, Space saving

500 L/1000 L type

Approx. 1/3 the volume of the current product (200 L type)

200 L type

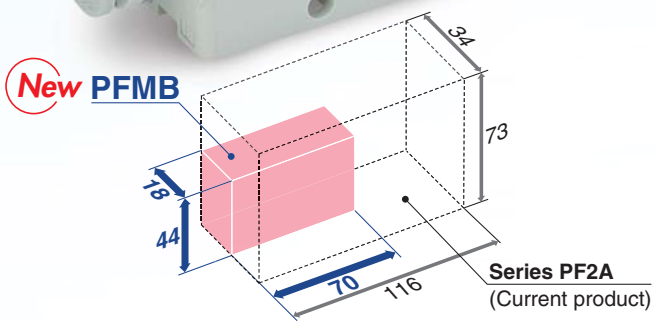

Comparison with PFMB7201 and PF2A721-03

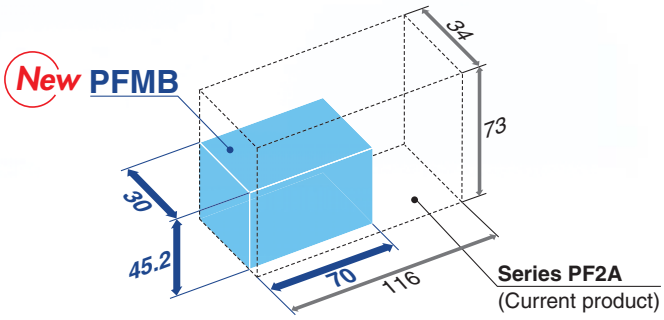

Comparison with PFMB7501-04 and PF2A751-04

Series PFMB

SMC

CAT.EUS100-95A-UK

Series PFMB

2-Colour Display Digital Flow Switch

Flow adjustment valve is integrated.

200 L type

Reduces piping installation work and space requirements. Special design provides smooth adjustment to match needle rotations.

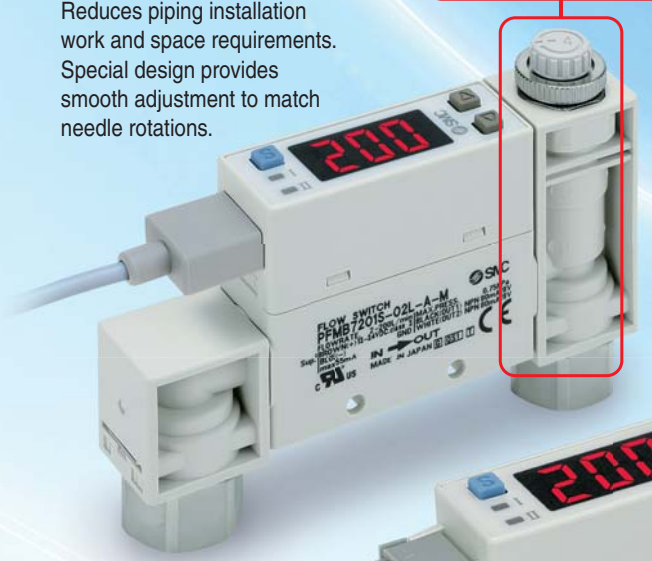

500 L/1000 L type

200 L type

Response time

Can be selected from

50 msec.(0.05 sec.)/**0.1** sec./ **0.5** sec./**1.0** sec./**2.0** sec.

Response time can be set depending on application.

Grease-free

Piping variations

200 L type

Straight

One-touch fitting ø8

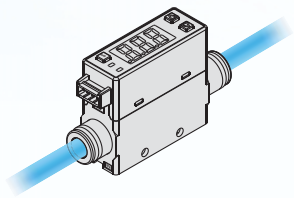

Female thread Rc, NPT, G 1/4

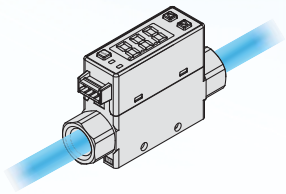

Bottom

One-touch fitting ø8

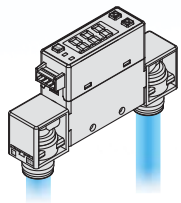

Female thread Rc, NPT, G 1/4

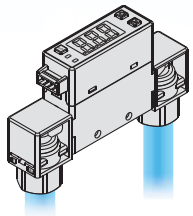

Reversed display mode

When the switch is used upside down, the orientation of the display can be rotated to make it easier to read.

No display rotating function Display is upside down.

With display rotating function

◎Functions (▶Refer to page 15 and 16 for details.)

- Output operation
- Display colour
- Reference condition
- Response time
- Display mode
- External input function
- Accumulated value hold
- Analogue output hold
- Forced output function
- Analogue output free range function
- Power-saving mode
- Peak/Bottom value display
- Keylock function
- Error display function
- Orientation correction function
- Reversed display mode
- Reset to the default settings.
- Setting of security code

Bypass structure

Bypass structure with protruding part at the main piping, reduces the contact of moist air with the sensor, reducing degradation of the sensor and maintaining accuracy.

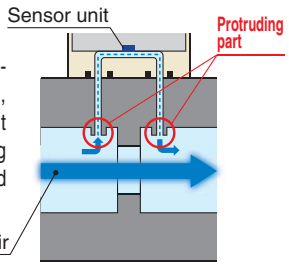

SMC

Digital flow switch to save energy!

Flow control is necessary for promoting energy saving in any application.
Saving energy starts from numerical control of the flow consumption of equipment and lines and clarification of the purpose and effect.

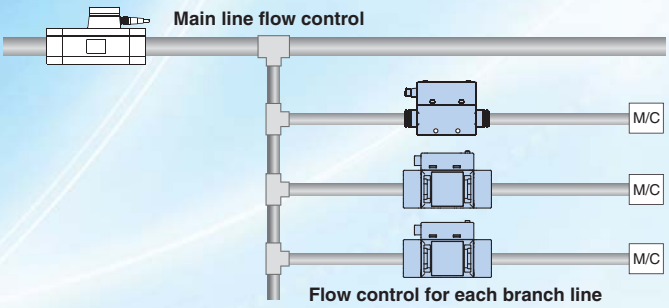

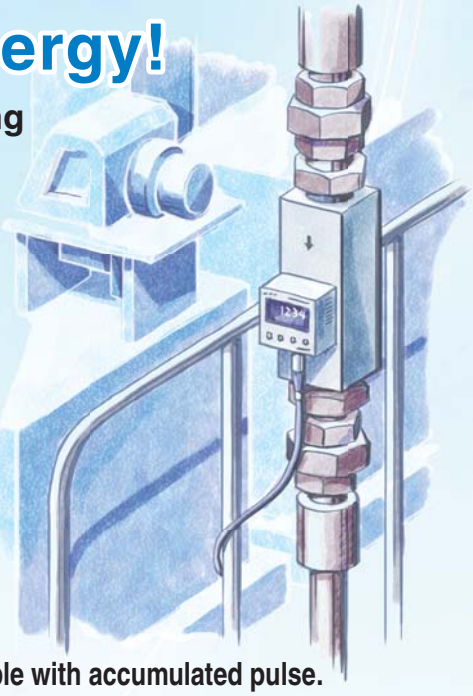

- Digital display allows visualization of flow rate.
- 2-Colour display Improved visibility

- Remote control is possible with accumulated pulse.

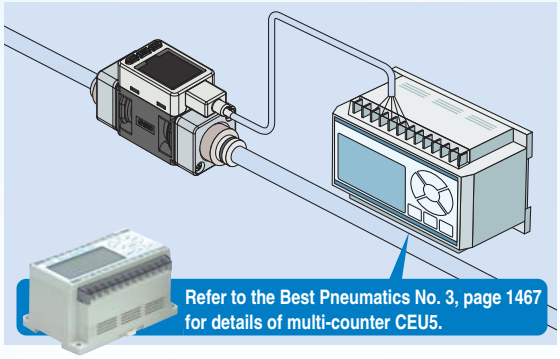

Applications

Control of purge air flow of ionizer

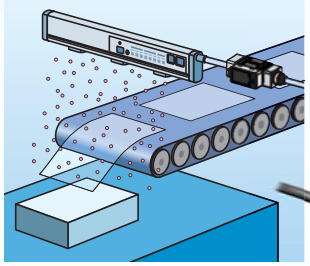

Flow control of the air for spray painting

Note) The product is not designed to be explosion proof.

- Flow control of N_2 gas to prevent lead frame oxidation
- N_2 blow prevents distortion of camera image due to air turbulence.

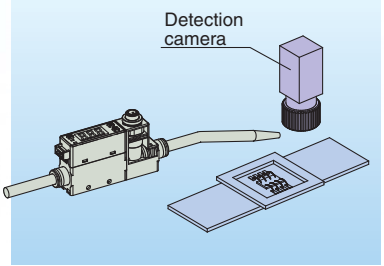

- Accumulated indication shows the operating flow rate or residual amount (of N_2 etc.) in a gas cylinder.

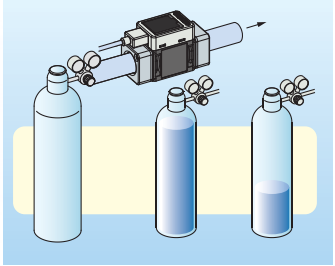

◎ Mounting

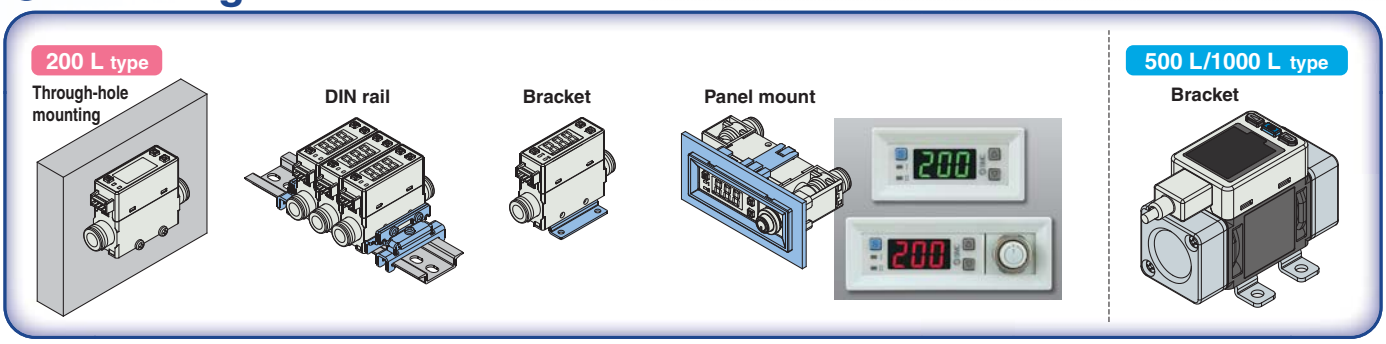

Example of Recommended Pneumatic Circuit

Air quality in the product specification can be satisfied by using this pneumatic circuit.

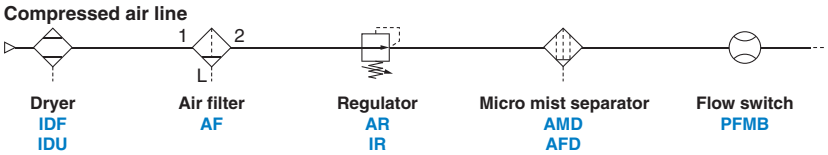

Flow Switch Flow Rate Variations

Series	Applicable fluid	Detection method	Minimum setting unit	Applicable flow range [L/min]
PFMV	Air N_2	Thermal type (MEMS)		0 – 0.5
				0 – 1
				0 – 3
				−0.5 – 0.5
				−1 – 1
				−3 – 3

Series	Applicable fluid	Detection method	Minimum setting unit	Applicable flow range [L/min]
PFM	Air N_2 Argon CO_2	Thermal type (MEMS)	0.01 L/min	0.2 – 10
			0.1 L/min	0.5 – 25
				1 – 50
				2 – 100
PFMB New	Air N_2	**Thermal type (MEMS) Bypass flow type**	**1 L/min**	**2 – 200**
				5 – 500
				10 – 1000
PF2A	Air N_2	Thermal type (Thermistor)	0.1 L/min	1 – 10
			0.5 L/min	5 – 50
			1 L/min	10 – 100
			2 L/min	20 – 200
			5 L/min	50 – 500
			5 L/min	150 – 3000
			10 L/min	300 – 6000
				600 – 12000

Flow Switch Variations/Basic Performance Table

Series	PFMV	PFM	New PFMB		PF2A	
						
Enclosure	IP40	IP40	**IP40**		IP65	
Fluid	Dry air, N_2	Dry air, N_2, Ar, CO_2	**Dry air, N_2**		Dry air, N_2	
Setting	Digital	Digital	**Digital**		Digital	
Rated flow range	0 to 0.5 L/min 0 to 1 L/min 0 to 3 L/min	–0.5 to 0.5 L/min –1 to 1 L/min –3 to 3 L/min	0.2 to 10 L/min 0.5 to 25 L/min 1 to 50 L/min 2 to 100 L/min	**2 to 200 L/min**	**5 to 500 L/min 10 to 1000 L/min**	1 to 10 L/min 5 to 50 L/min 10 to 100 L/min 20 to 200 L/min	50 to 500 L/min 150 to 3000 L/min 300 to 6000 L/min 600 to 12000 L/min
Power supply voltage	24 VDC±10%	24 VDC±10%	**12 to 24 VDC±10%**		12 to 24 VDC±10%	
Temperature characteristics (25°C reference)	±2%F.S. (15 to 35°C) ±5%F.S. (0 to 50°C)	**Monitor unit** ±0.5%F.S. (0 to 50°C)	±2%F.S.(15 to 35°C) ±5%F.S.(0 to 50°C)	**±2%F.S.(15 to 35°C) ±5%F.S.(0 to 50°C)**	±3%F.S.(15 to 35°C) ±5%F.S.(0 to 50°C) ±2%F.S. (PF2A7□□H: 0 to 50°C)	
Repeatability	±1%F.S. (Fluid: Dry air) Analogue output: ±5%F.S.	**Monitor unit** ±0.1%F.S. Analogue output: ±0.5%F.S.	±1%F.S. (Fluid: Dry air) Analogue output: ±3%F.S.	**±1%F.S. (Fluid: Dry air)**	±1%F.S. (PF2A7□0, PF2A7□□H) ±2%F.S. (PF2A7□1)	
Hysteresis	Hysteresis mode: Variable Window comparator mode: Variable	Hysteresis mode: Variable Window comparator mode: Variable	**Hysteresis mode: Variable Window comparator mode: Variable**		Hysteresis mode: Variable Window comparator mode: Fixed (3 digits)	
Output	NPN/PNP Open collector Analogue voltage output Analogue current output	NPN/PNP Open collector Accumulated pulse output Analogue voltage output Analogue current output	**NPN/PNP Open collector Accumulated pulse output Analogue voltage output Analogue current output**		NPN/PNP Open collector Accumulated pulse output	
Display	2-Colour LCD display	2-Colour LED display	**2-Colour LED display**	**2-Colour LCD display**	LED display	

2-Colour Display
Digital Flow Switch
Series PFMB7

(200 L type only)

RoHS

How to Order

PFMB 7 201 □ – C8 □ – A □ – M □ □

Type

7	Integrated display

Rated flow range (Flow rate range)

201	2 to 200 L/min

Flow adjustment valve

—	None
S	Yes

Port size

C8	ø8 (5/16") One-touch fitting
02*	Rc1/4
N02*	NPT1/4
F02*	G1/4 Note 4)

Note 4) ISO1179-1 compliant
*Made to Order

Piping entry direction

—	L*
Straight	Bottom

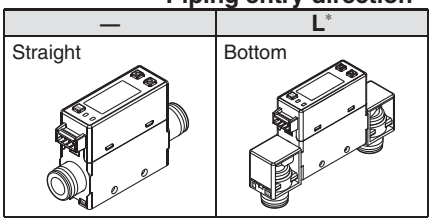

*Made to Order

Output specifications

	OUT1	OUT2
A	NPN	NPN
B	PNP	PNP
C	NPN	Analogue 1 to 5 V
D	NPN	Analogue 4 to 20 mA
E*	PNP	Analogue 1 to 5 V
F*	PNP	Analogue 4 to 20 mA
G*	NPN	External input Note)
H*	PNP	External input Note)

Note) Accumulated flow, peak flow and minimum flow can be reset by external signal input.
*Made to Order

Option 1

—	W
With lead wire with connector (2 m)	With lead wire with connector (2 m) + Connector cover (Silicone rubber)
ZS-33-D	ZS-33-F, ZS-33-D

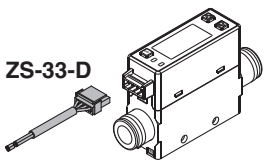

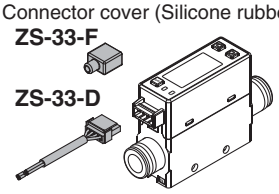

N
No lead wire

Note) If an accessory is required, order separately using "ZS" part numbers.

Calibration certificate Note 1)

—	None
A*	With calibration certificate

Note 1) Certificate in both English and Japanese
*Made to Order

Unit specifications

M	SI unit only Note 2)
—	Unit selection function Note 3)

Note 2) Fixed unit: Instantaneous flow: L/min
Accumulated flow: L
Note 3) Since the unit for Japan is fixed to SI due to new measurement law, this option is for overseas.
Unit can be changed. Instantaneous flow: L/min⇔cfm
Accumulated flow: L⇔ft^3

Option 2

—	R	S
No bracket	With bracket (For without flow adjustment valve) ZS-33-M	With bracket (For with straight type flow adjustment valve) ZS-33-MS

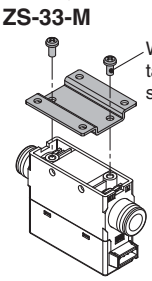

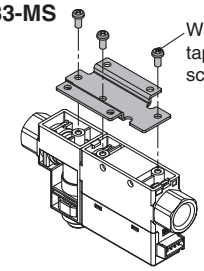

T	V
With panel mount adapter (For without flow adjustment valve) ZS-33-J	With panel mount adapter (For with flow adjustment valve) ZS-33-JS

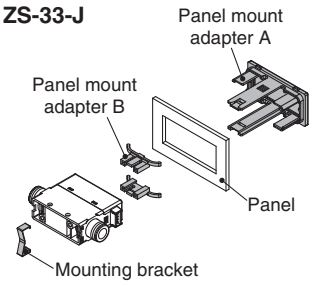

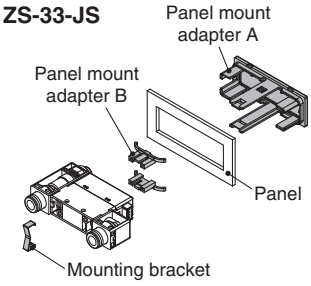

Note) Each option is not assembled with the product, but shipped together.
If an accessory is required, order separately using "ZS" part numbers.

DIN Rail Mounting Bracket (Order Separately)

ZS – 33 – R □

Stations

1	1 station
2	2 stations
3	3 stations
4	4 stations
5	5 stations

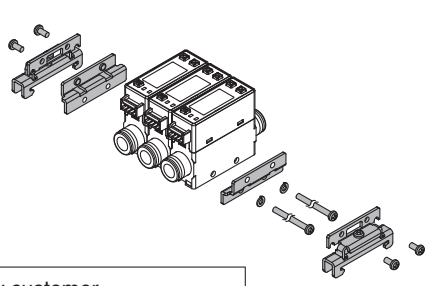

- DIN rail is prepared by customer.
- DIN rail is not suitable for port size F02 (G1/4).

How to Order

PFMB 7 501 – □ 04 – A □ – M □ □

Type

7	Integrated display

Rated flow range (Flow rate range)

501	5 to 500 L/min
102	10 to 1000 L/min

Thread type

—	Rc
N	NPT
F	G Note)

Note) ISO228 compliant

Port size

	Port size	Rated flow range	
		501	102
04	1/2	●	●

Output specifications

	OUT1	OUT2
A	NPN	NPN
B	PNP	PNP
C	NPN	Analogue 1 to 5 V
D	NPN	Analogue 4 to 20 mA
E*	PNP	Analogue 1 to 5 V
F*	PNP	Analogue 4 to 20 mA
G*	NPN	External input Note 4)
H*	PNP	External input Note 4)

Note 4) Accumulated flow, peak flow and minimum flow can be reset by external signal input.
*Made to Order

Option 1

—	W
With lead wire with connector (2 m)	With lead wire with connector (2 m) + Connector cover (Silicone rubber)
ZS-33-D 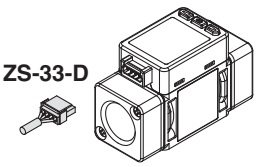	ZS-33-F, ZS-33-D 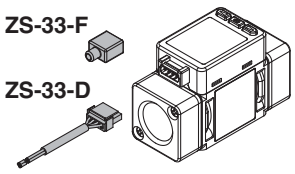
N	
No lead wire	

Note) If an accessory is required, order separately using "ZS" part numbers.

Calibration certificate Note 1)

—	None
A*	With calibration certificate

Note 1) Certificate in both English and Japanese
*Made to Order

Option 2

—	R
No bracket	With bracket 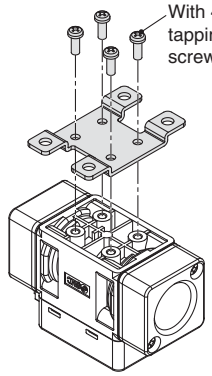

Note) Each option is not assembled with the product, but shipped together. If an accessory is required, order separately using "ZS" part numbers.

Unit specifications

M	SI unit only Note 2)
—	Unit selection function Note 3)

Note 2) Fixed unit: Instantaneous flow: L/min
Accumulated flow: L
Note 3) Since the unit for Japan is fixed to SI due to new measurement law, this option is for overseas.
Unit can be changed. Instantaneous flow: L/min⇔cfm
Accumulated flow: L⇔ft^3

Option 2/Part No.

Option	Part no.	Qty.	Note
Bracket	**ZS-42-C**	1	PFMB 7501/7102 with self-tapping screw (3 x 6), 4 pcs.

Specifications

Refer to "Handling Precautions for SMC Products" for Flow Switch Precautions and the Operation Manual in our website for Specific Product Precautions.

Model			PFMB7201	PFMB7501	PFMB7102
Fluid	Applicable fluid Note 1)		Air, N_2 (Air quality grade is JIS B 8392-1 1.1.2 to 1.6.2, ISO8573-1 1.1.2 to 1.6.2.)		
	Fluid temperature range		0 to 50°C		
Flow	Detection method		Thermal type		
	Rated flow range		2 to 200 L/min	5 to 500 L/min	10 to 1000 L/min
	Set flow rate range	Instantaneous flow	2 to 210 L/min	5 to 525 L/min	10 to 1050 L/min
		Accumulated flow	0 to 999,999,999 L	0 to 999,999,990 L	
	Minimum setting unit	Instantaneous flow	1 L/min		
		Accumulated flow	1 L	10 L	
	Accumulated volume per pulse (Pulse width = 50 msec.)		1 L/pulse		10 L/pulse
	Accumulated value hold function Note 2)		Interval of 2 or 5 minutes can be selected.		
Pressure	Rated pressure range		0 to 0.75 MPa	0 to 0.8 MPa	
	Proof pressure		1.0 MPa	1.2 MPa	
	Pressure loss		Refer to "Pressure Loss" graph.		
	Pressure characteristics Note 3)		±5%F.S. (0 to 0.75 MPa, 0.35 MPa reference)	±5%F.S. (0 to 0.8 MPa, 0.6 MPa reference)	
Electrical	Power supply voltage		12 to 24 VDC ±10%		
	Current consumption		55 mA or less		
	Protection		Polarity protection		
Accuracy Note 11)	Display accuracy		±3%F.S.		
	Analogue output accuracy		±3%F.S.		
	Repeatability		±1%F.S. (±2%F.S. when response time is set to 0.05 seconds.)		
	Temperature characteristics		±5%F.S. (0 to 50°C, 25°C reference)		
Switch output	Output type		NPN open collector PNP open collector		
	Output mode		Select from Hysteresis, Window comparator, Accumulated output or Accumulated pulse output modes.		
	Switch operation		Select from Normal or Reversed output.		
	Maximum load current		80 mA		
	Maximum applied voltage (NPN only)		28 VDC		
	Internal voltage drop (Residual voltage)		NPN output type: 1 V or less (at load current 80 mA) PNP output type: 2 V or less (at load current 80 mA)		
	Response time Note 4)		Select from 0.05 sec., 0.1 sec., 0.5 sec., 1 sec., or 2 sec.		
	Hysteresis Note 5)		Variable from 0		
	Protection		Short circuit protection		
Analogue output Note 6)	Output type		Voltage output: 1 to 5 V, Current output: 4 to 20 mA		
	Impedance	Voltage output	Output impedance: Approx. 1 kΩ		
		Current output	Max. load impedance at power supply voltage 24 V: 600 Ω, at power supply voltage 12 V: 300 Ω		
	Response time Note 7)		Linked with the response time of the switch output.		
External input Note 8)	External input		Input voltage: 0.4 V or less (reed or solid state) for 30 msec. or longer		
	Input mode		Select from Accumulated flow external reset or Peak/Bottom reset.		
Display	Reference condition Note 9)		Select from Standard condition or Normal condition.		
	Display mode		Select from Instantaneous flow or Accumulated flow.		
	Unit Note 10)	Instantaneous flow	L/min or cfm can be selected.		
		Accumulated flow	L or ft^3 can be selected.	L or ft^3 can be selected.	
	Displayable range	Instantaneous flow	–10 to 210 L/min (Displays [0] when the value is within the –1 to 1 L/min range.)	–25 to 525 L/min (Displays [0] when the value is within the –4 to 4 L/min range.)	–50 to 1050 L/min (Displays [0] when the value is within the –9 to 9 L/min range.)
		Accumulated flow	0 to 999,999,999 L		
	Minimum display unit	Instantaneous flow	1 L/min		
		Accumulated flow	1 L	10 L	
	Display		Display method: LED Display colour: Red/Green Display: 3 digit 7 segment	Display method: LCD Display colour: Red/Green Display: 4 digit 7 segment	
	Indicator LED		LED ON when switch output is ON. (OUT1: Green, OUT2: Red)	LED ON when switch output is ON. (OUT1/OUT2: Orange)	
Environmental	Enclosure		IP40		
	Withstand voltage		1000 VAC for 1 minute between terminals and housing		
	Insulation resistance		50 MΩ or more (500 VDC measured via megohmmeter) between terminals and housing		
	Operating temperature range		Operation: 0 to 50°C, Storage: –10 to 60°C (No condensation or freezing)		
	Operating humidity range		Operation, Storage: 35 to 85%RH (No condensation or freezing)		
Standard			CE, UL (CSA), RoHS	CE, RoHS	
Piping	Piping specifications		Rc1/4, NPT1/4, G1/4, ø8 One-touch fitting	Rc1/2, NPT1/2, G1/2	
	Piping entry direction		Straight, Bottom		
Main materials of parts in contact with fluid Note 12)			FKM, Stainless steel 304, PPS, PBT, Brass (Electroless nickel plating), HNBR, Si, Au, GE4F	ADC, PPS, Stainless steel 304, Au HNBR, Si, GE4F	
Weight	Body		Rc1/4, NPT1/4/Straight: 70 g Bottom: 85 g G1/4/Straight: 115 g Bottom: 130 g ø8 One-touch fitting/Straight: 50 g Bottom: 65 g	100 g	
	Flow adjustment valve		+45 g	—	
	Lead wire		+35 g		
	Bracket		+20 g	+25 g	
	Panel mount adapter		+15 g	—	
	DIN rail mounting bracket		+65 g	—	

Note 1) Refer to "Example of Recommended Pneumatic Circuit" on Features 2.
Note 2) When using the accumulated value hold function, use the operating conditions to calculate the product life, and do not exceed it. The maximum access limit of the memory device is 1 million cycles. If the product is operated 24 hours per day, the product life will be as follows:
- 5 min interval: life is calculated as 5 min x 1 million = 5 million min = 9.5 years
- 2 min interval: life is calculated as 2 min x 1 million = 2 million min = 3.8 years

If the accumulated flow external reset is repeatedly used, the product life will be shorter than calculated life.
Note 3) Do not release the OUT side piping port of the product directly to the atmosphere without connecting piping. If the product is used with the piping port released to atmosphere, accuracy may vary.
Note 4) The time from when the flow is changed by a step input (when the flow rate changes from 0 to the maximum flow instantaneously) until the switch output turns ON (or OFF) when set at 90% of the rated flow rate.
Note 5) If the flow fluctuates around the set value, the width for setting more than the fluctuating width needs to be set. Otherwise, chattering will occur.
Note 6) When using a product with an analogue output
Note 7) The time from when the flow is changed as a step input (when the flow rate changes from 0 to the maximum flow instantaneously) until the analogue output reaches 90% of the rated flow rate.
Note 8) When using a product with an external input
Note 9) The flow rate given in the specification is the value at standard condition. To convert the units from standard condition to normal condition, use the following conversion calculation:
Flow rate at standard condition x 0.927 = Flow rate at normal condition
Note 10) Setting is only possible for models with the unit selection function.
Note 11) Refer to "Straight Piping Length and Accuracy" on page 4 for details.
Note 12) Refer to "Construction/Fluid Contact Parts" on page 5 for details.

Flow Range

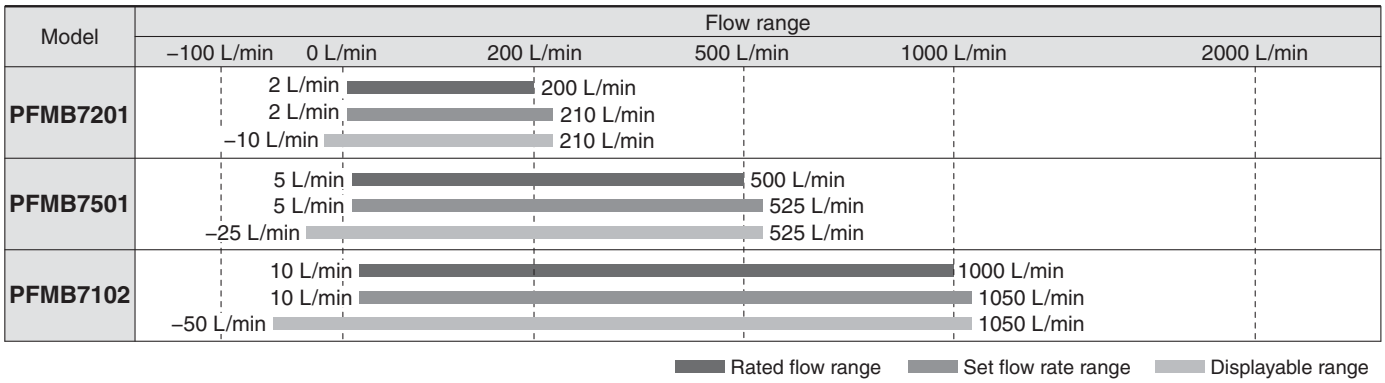

Analogue Output

Flow/Analogue Output

	A	B	C
Voltage output	1 V	1.04 V	5 V
Current output	4 mA	4.16 mA	20 mA

Model	Rated flow [L/min]	
	Min.	Max.
PFMB7201	2	200
PFMB7501	5	500
PFMB7102	10	1000

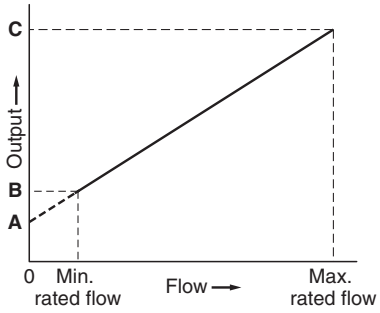

Flow Adjustment Valve Flow-rate Characteristics

PFMB7201 (for 200 L/min)

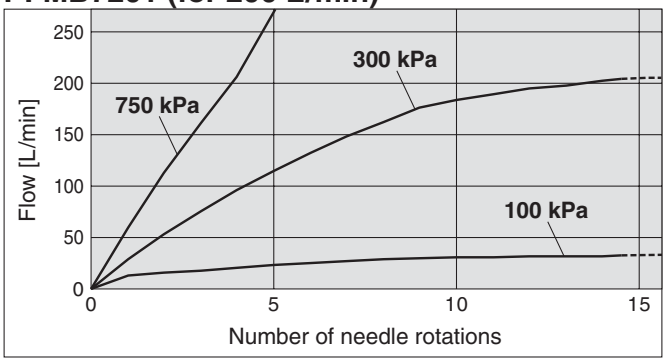

Pressure Loss

PFMB7201 (for 200 L/min)
(Without flow adjustment valve)

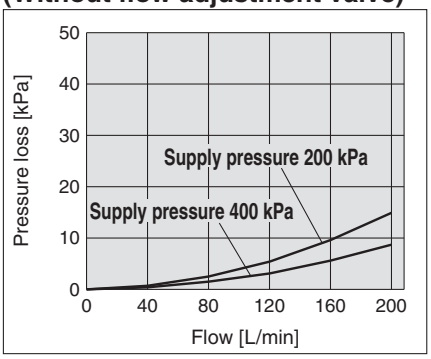

PFMB7501 (for 500 L/min)

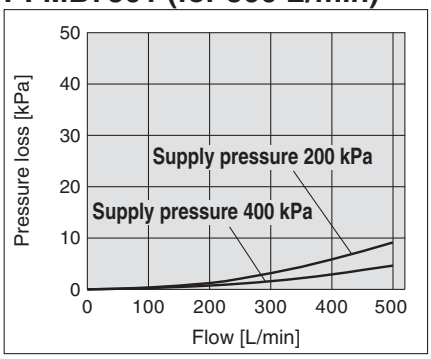

PFMB7102 (for 1000 L/min)

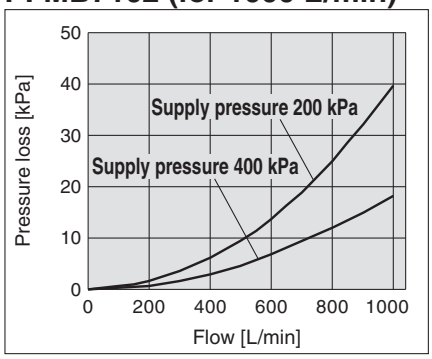

Straight Piping Length and Accuracy

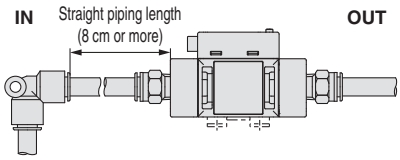

- The piping on the IN side must have a straight section of piping with a length of 8 cm or more. If a straight section of piping is not installed, the accuracy can vary by approximately ±2%F.S.
  ∗ "Straight section" means a part of the piping without any bends or rapid changes in the cross sectional area.
- When the PFMB7201 is connected to tubing, use a tube I.D. 5 mm just before the product.
- When the PFMB7501 or 7102 is connected to tubing, use a tube I.D. 9 mm or more just before the product.
  The accuracy can vary by approximately ±2%F.S. when such tubing is not used.

PFMB7201/7501/7102

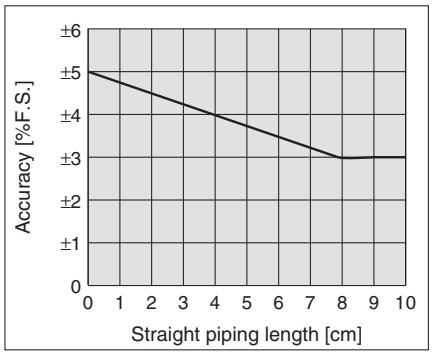

Construction/Fluid Contact Parts

PFMB7201

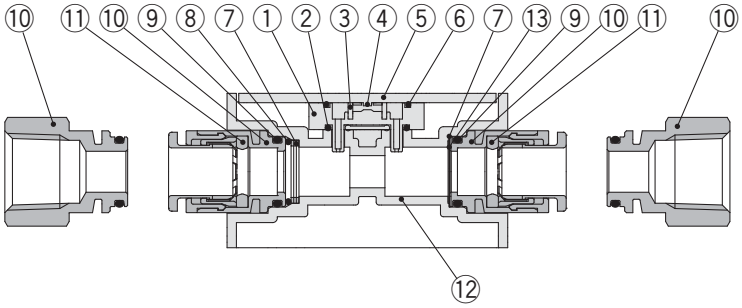

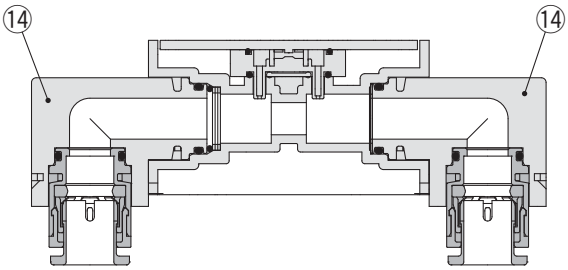

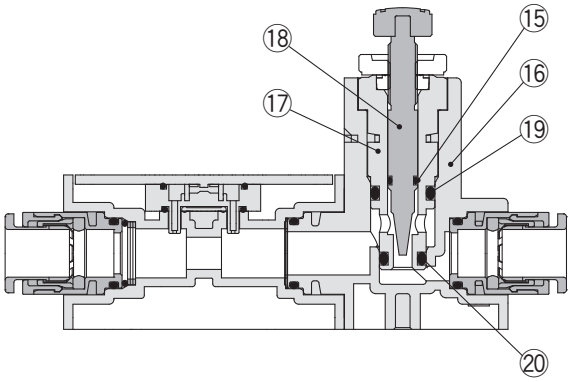

Component Parts

No.	Description	Material	Note
1	**Sensor body**	PPS	
2	**Gasket**	HNBR	
3	**Flow rectifier**	Stainless steel 304	
4	**Sensor chip**	Silicone	
5	**Printed circuit board**	GE4F	
6	**Gasket**	HNBR	
7	**Flow rectifier**	Stainless steel 304	
8	**O-ring**	FKM	Fluoro coating
9	**O-ring**	FKM	Fluoro coating
10	**Fitting for piping**	Brass	Electroless nickel plating
11	**O-ring**	FKM	Fluoro coating
12	**Body**	PBT	
13	**Gasket**	HNBR	
14	**Bottom piping adapter**	PBT	
15	**O-ring**	HNBR	Fluoro coating
16	**Flow adjustment valve body**	PBT	
17	**Body**	Brass	Electroless nickel plating
18	**Needle**	Brass	Electroless nickel plating
19	**O-ring**	HNBR	Fluoro coating
20	**O-ring**	HNBR	Fluoro coating

PFMB7501/7102

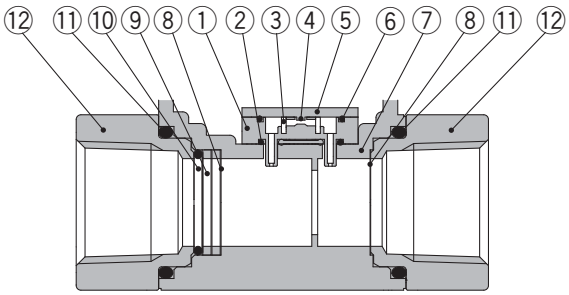

Component Parts

No.	Description	Material	Note
1	**Sensor body**	PPS	
2	**Gasket**	HNBR	
3	**Flow rectifier**	Stainless steel 304	
4	**Sensor chip**	Silicone	
5	**Printed circuit board**	GE4F	
6	**Gasket**	HNBR	
7	**Body**	PPS	
8	**Mesh**	Stainless steel 304	
9	**Spacer**	PPS	
10	**O-ring**	HNBR	
11	**O-ring**	HNBR	
12	**Attachment**	ADC	Coating

Dimensions

PFMB7201-C8

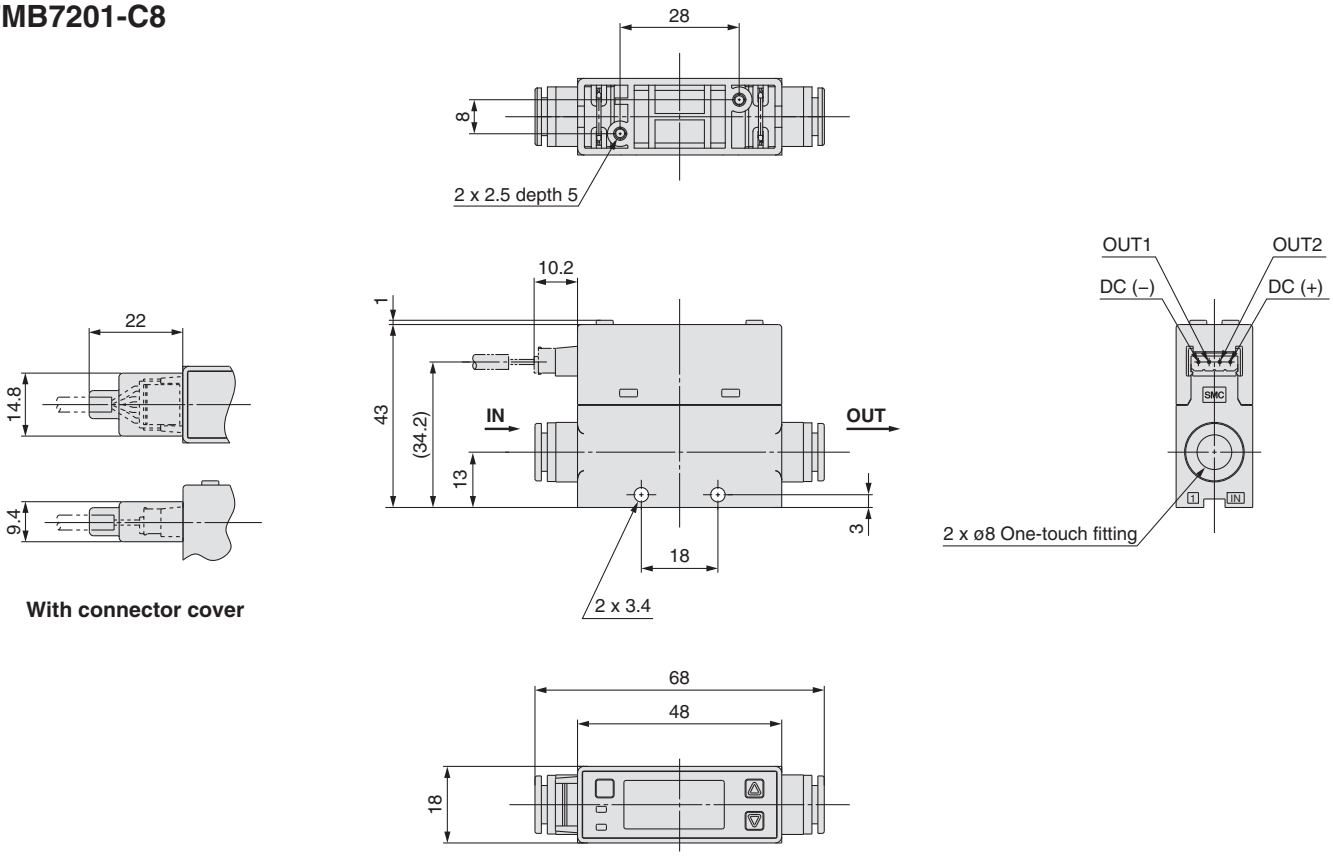

PFMB7201-C8L

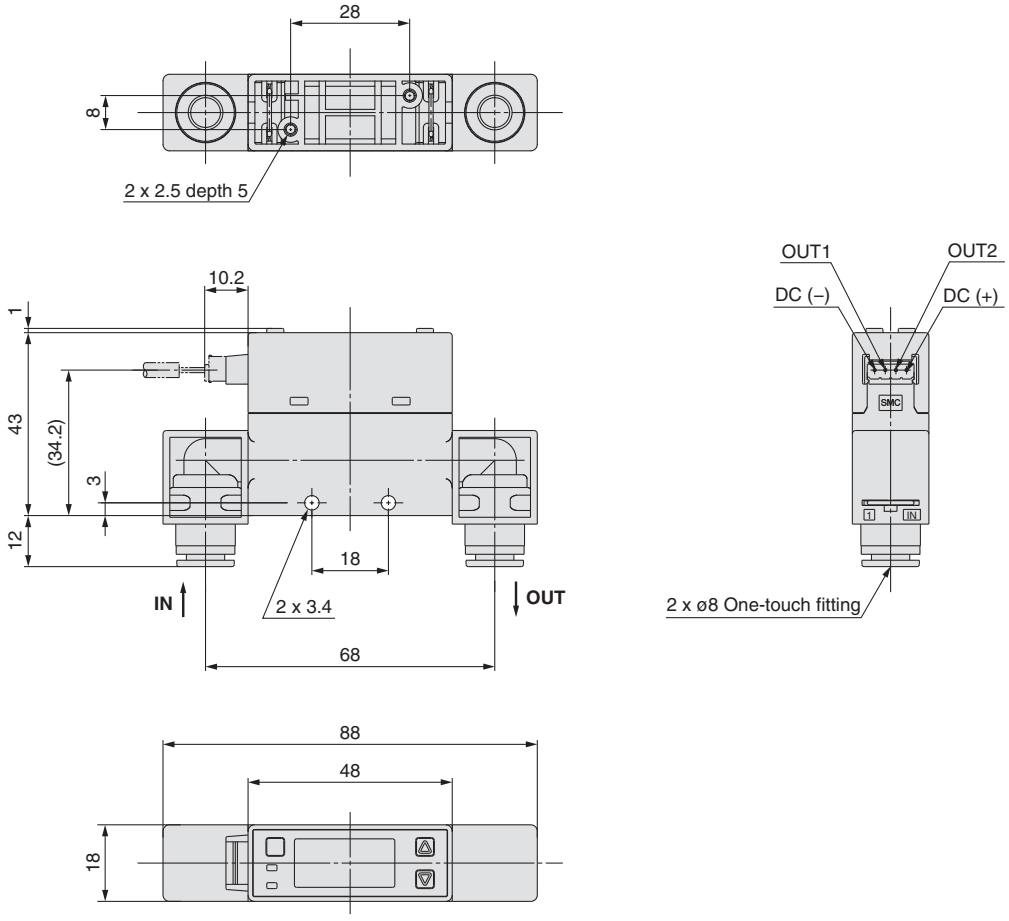

Dimensions

PFMB7201-(N)02

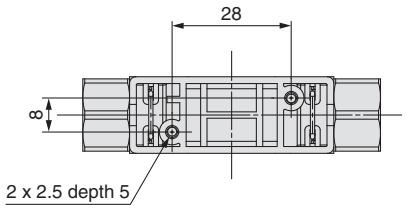

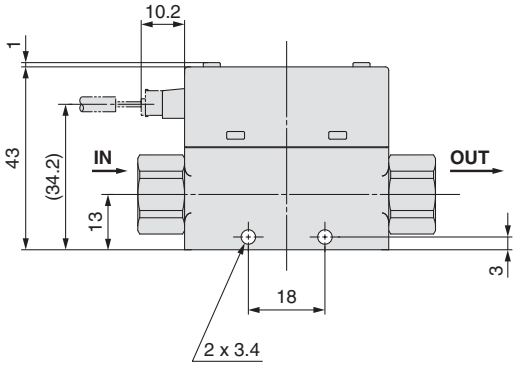

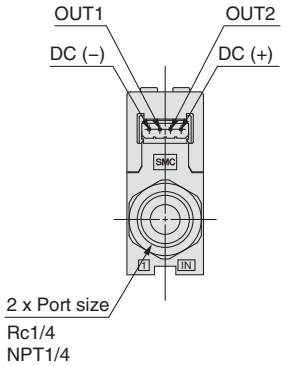

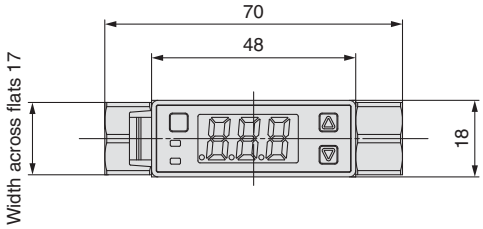

PFMB7201-(N)02L

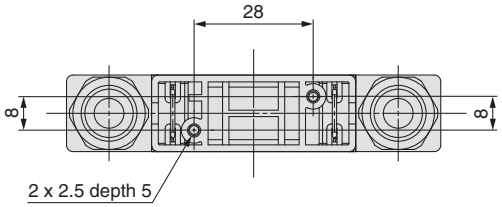

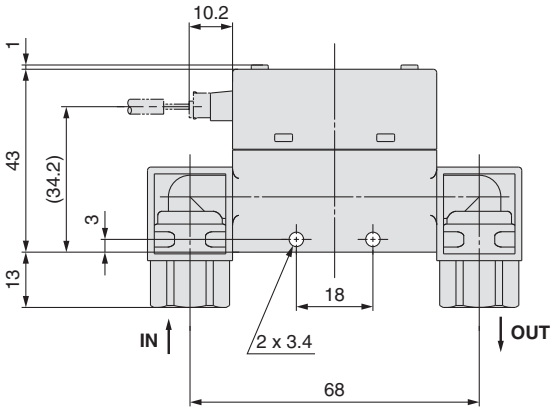

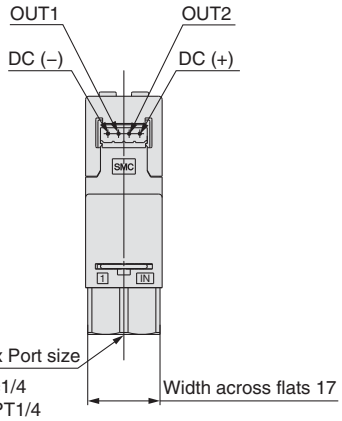

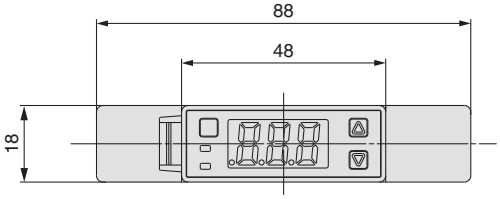

Dimensions

PFMB7201-F02

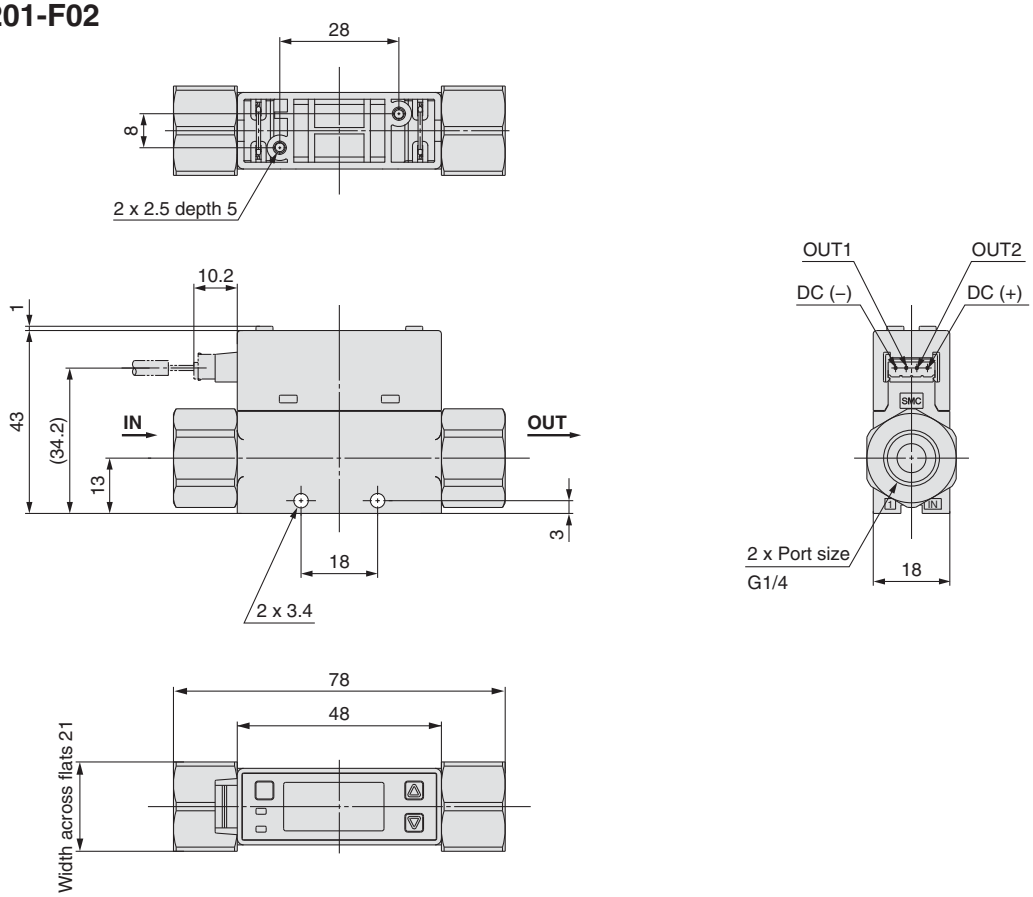

PFMB7201-F02L

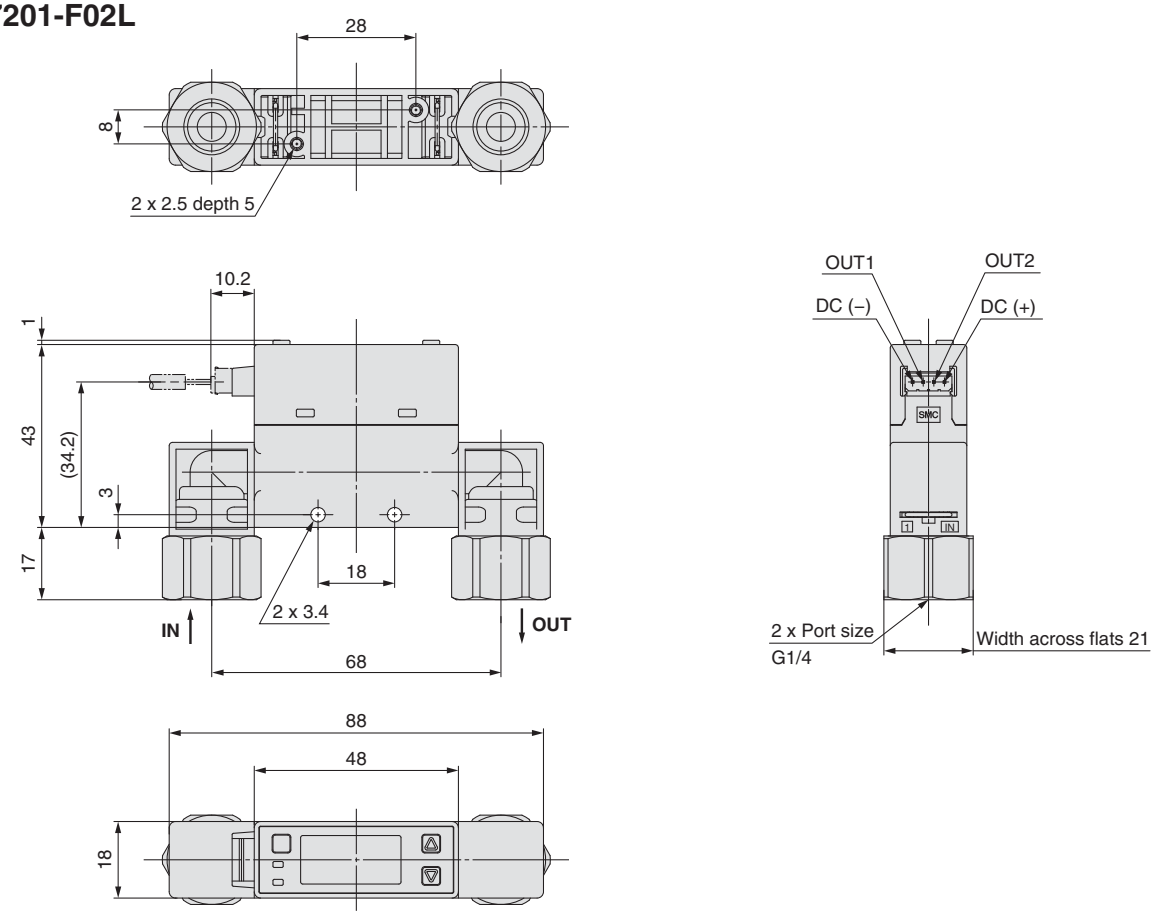

Dimensions

PFMB7201S-C8

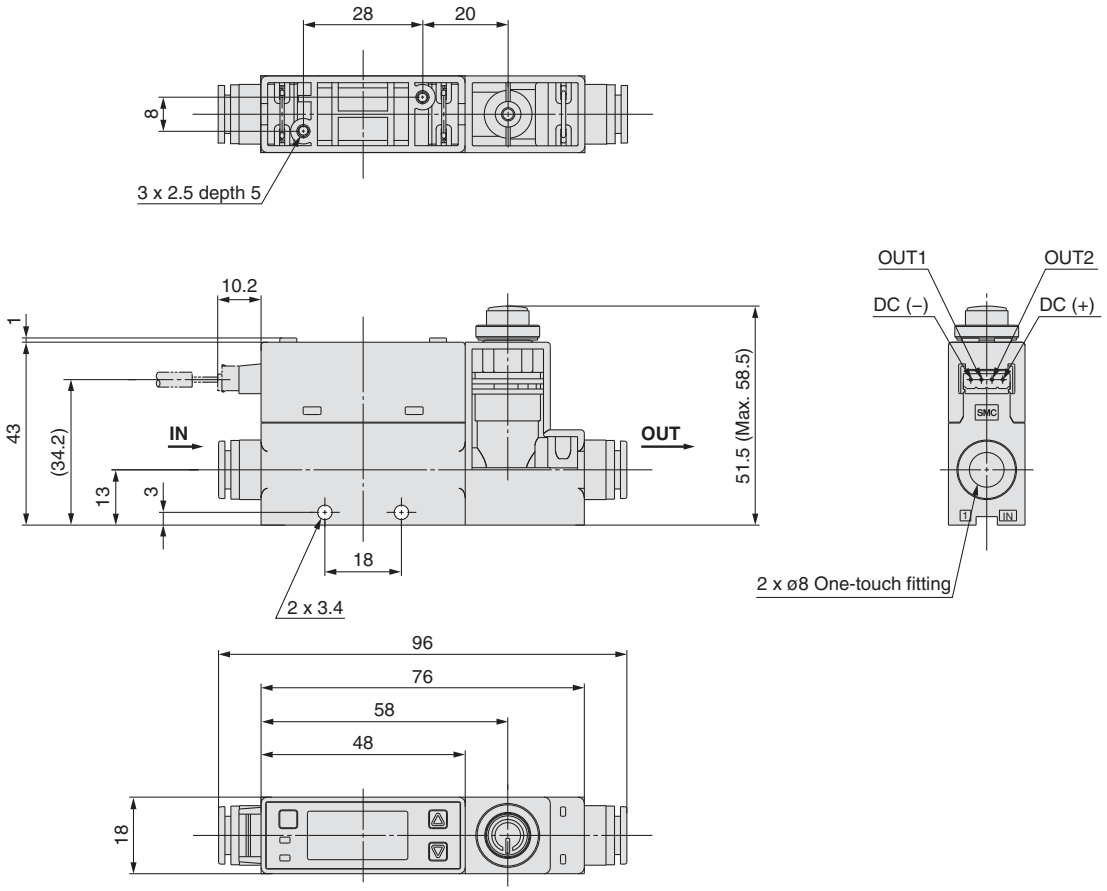

PFMB7201S-C8L

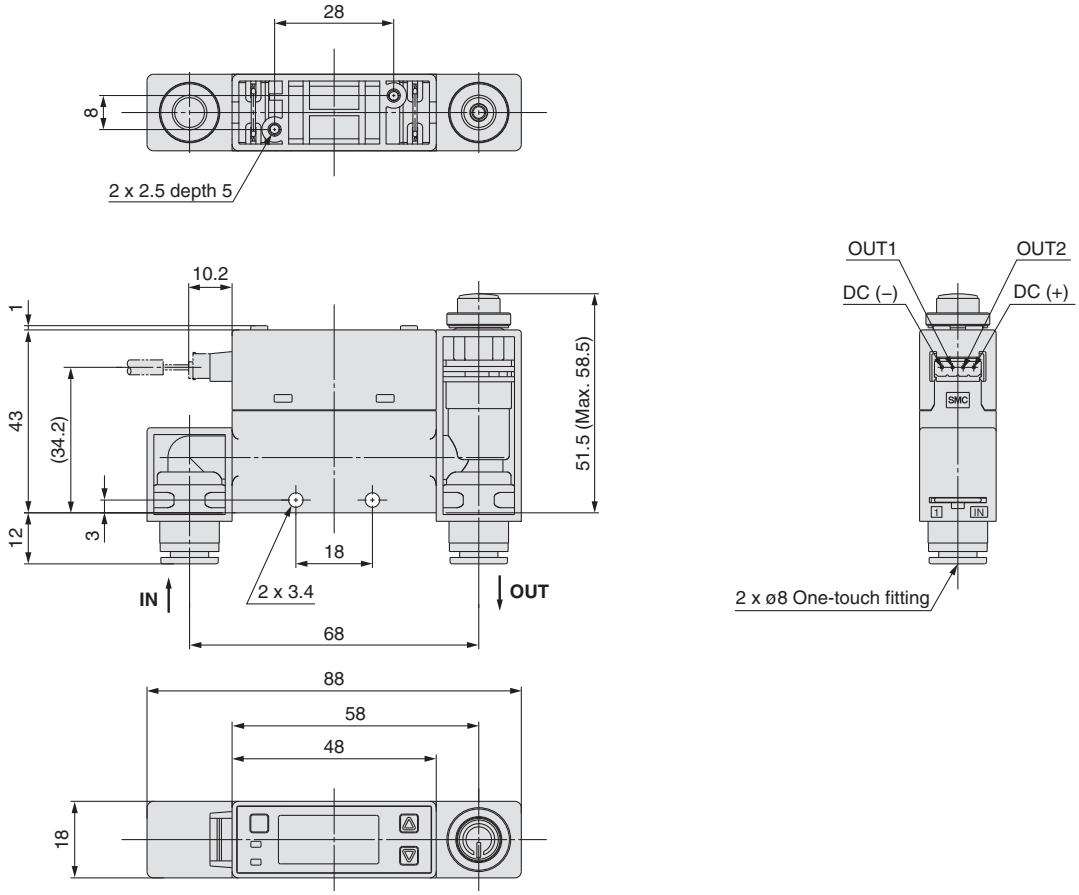

Dimensions

PFMB7201S-(N)02

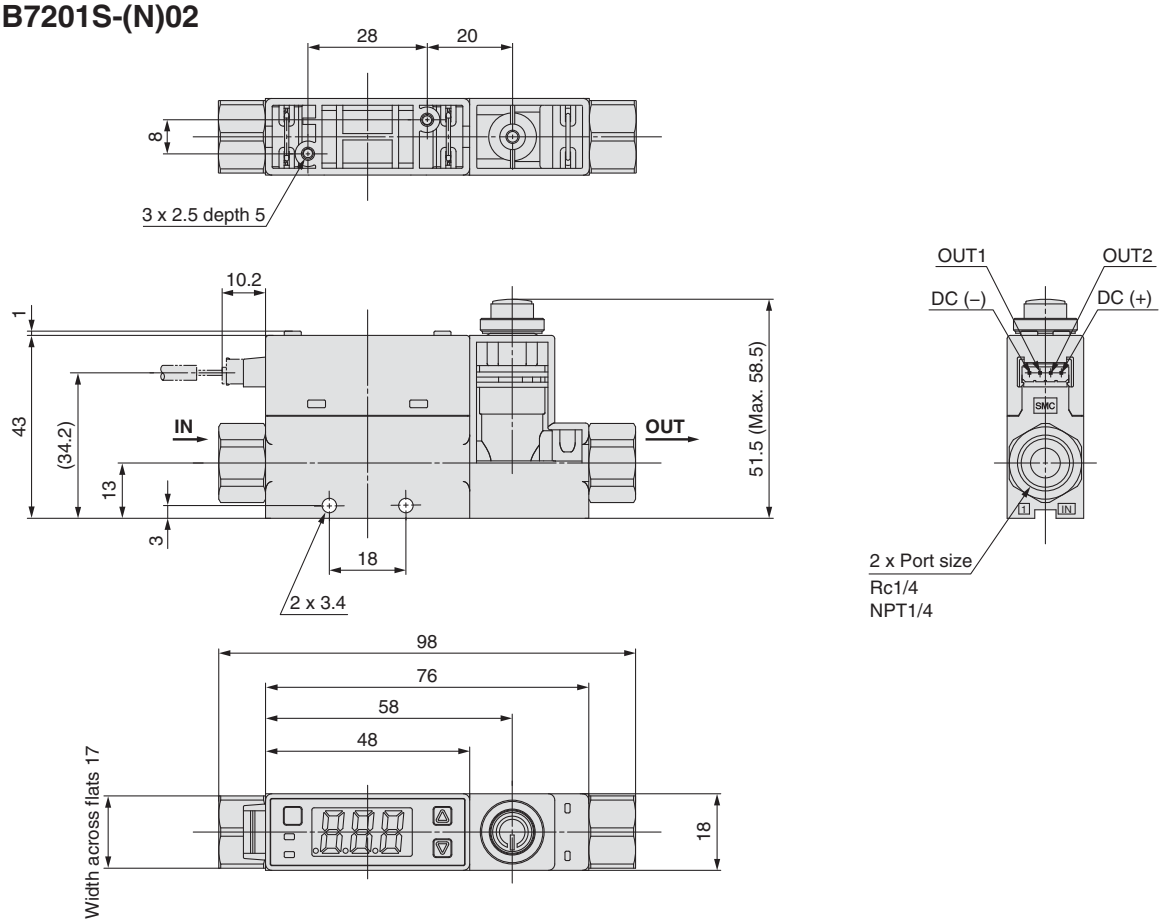

PFMB7201S-(N)02L

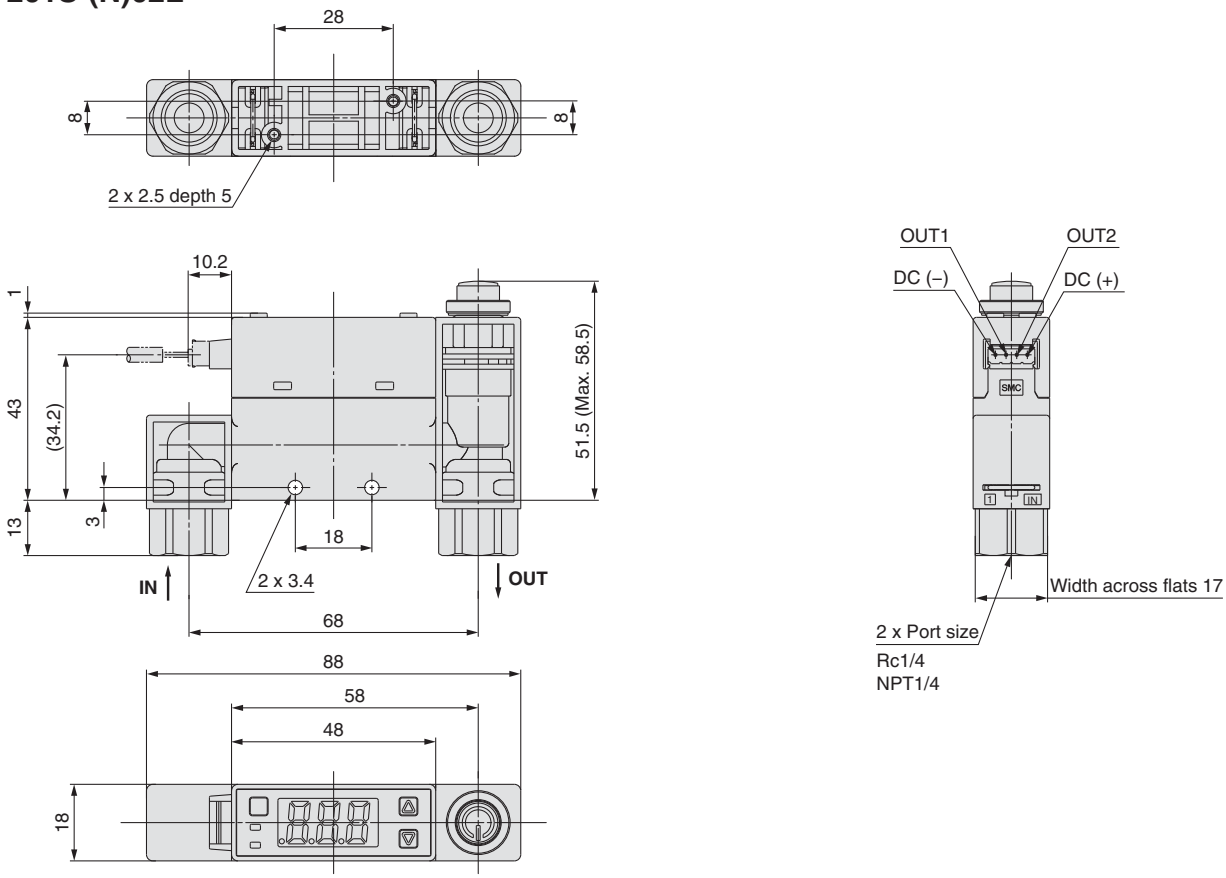

Dimensions

PFMB7201S-F02

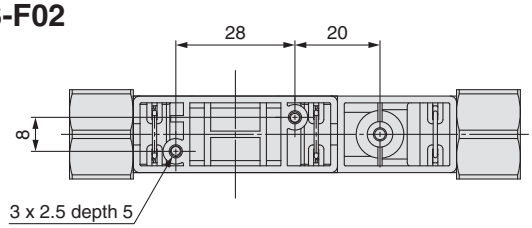

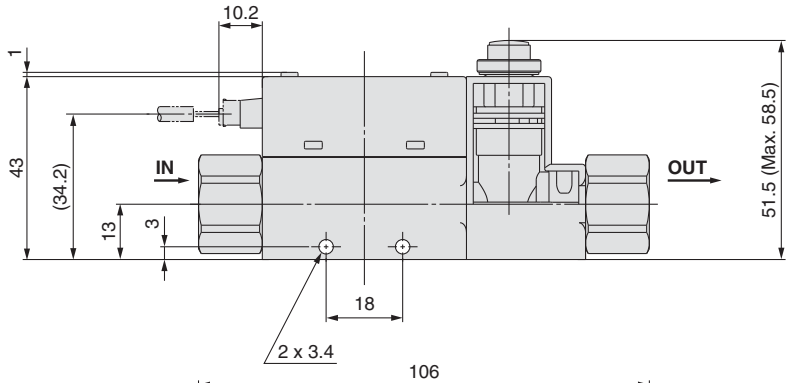

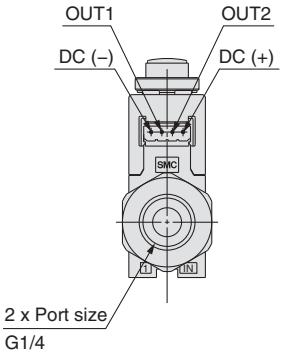

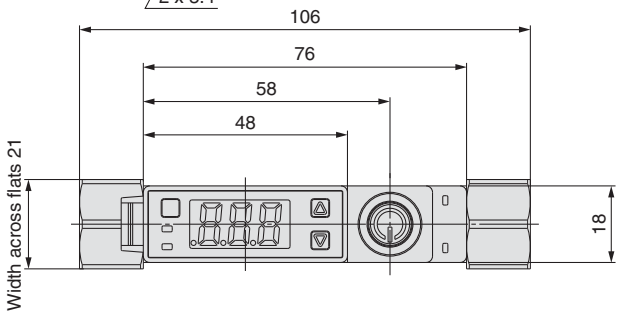

PFMB7201S-F02L

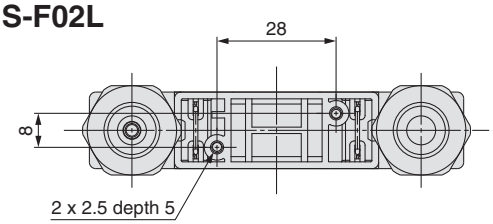

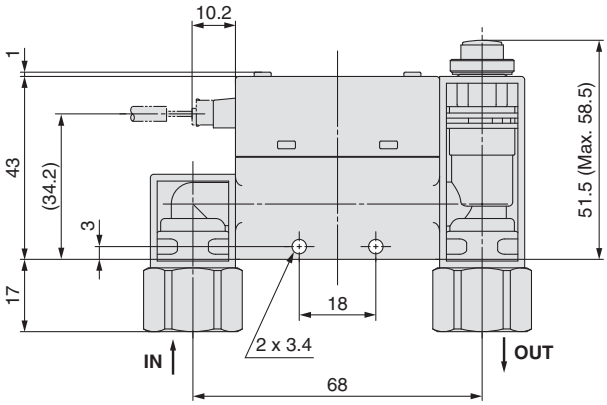

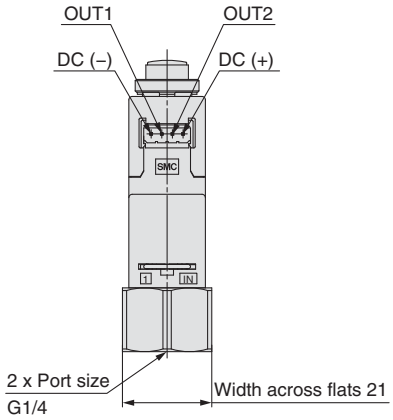

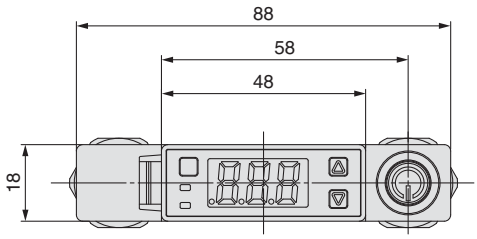

Dimensions

PFMB7201

Panel mount/
Without flow adjustment valve/Straight

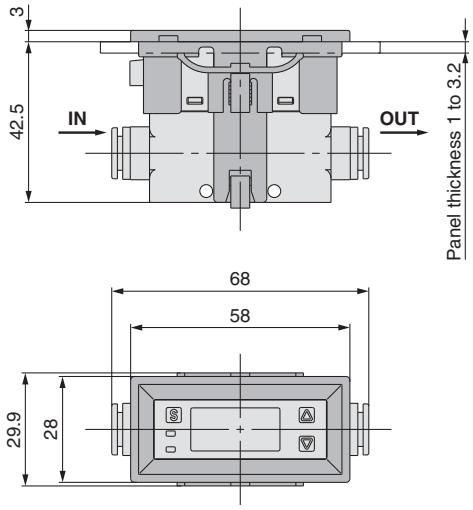

Panel mount/
With flow adjustment valve/Straight

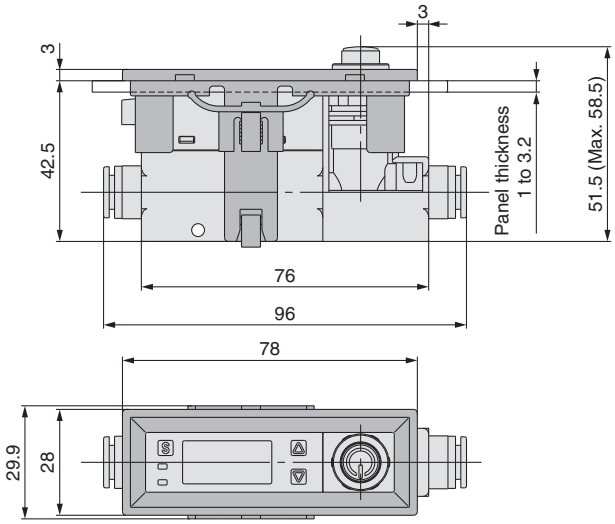

Panel mount/
Without flow adjustment valve/Bottom

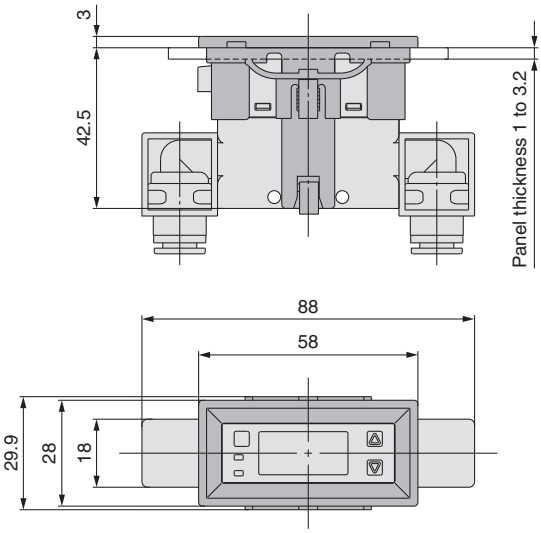

Panel mount/
With flow adjustment valve/Bottom

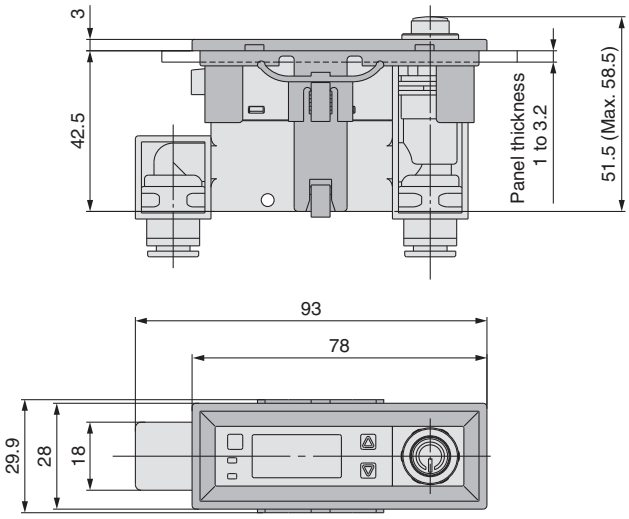

Panel Fitting Dimensions

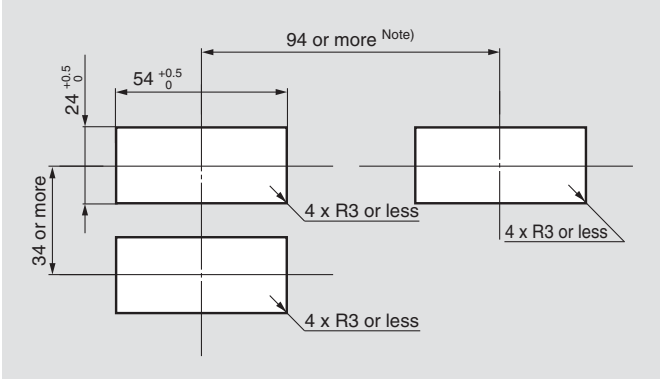

Panel thickness 1 to 3.2 mm

Note) Piping entry direction: Minimum dimensions for bottom piping. If using straight piping, the piping material and tubing need to be taken into consideration when designing the system. If a bend (R) is used, limit it to R3 or less.

Panel Fitting Dimensions

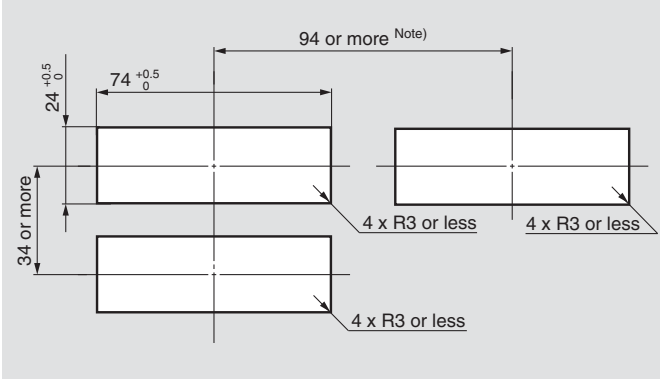

Panel thickness 1 to 3.2 mm

Note) Piping entry direction: Minimum dimensions for bottom piping. If using straight piping, the piping material and tubing need to be taken into consideration when designing the system. If a bend (R) is used, limit it to R3 or less.

Dimensions

PFMB7201

With bracket/Without flow adjustment valve

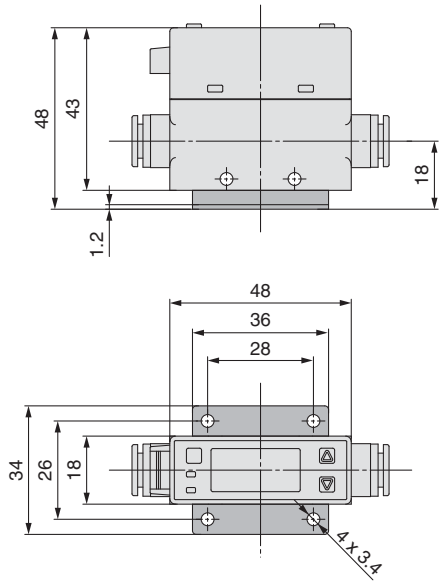

With bracket/With flow adjustment valve

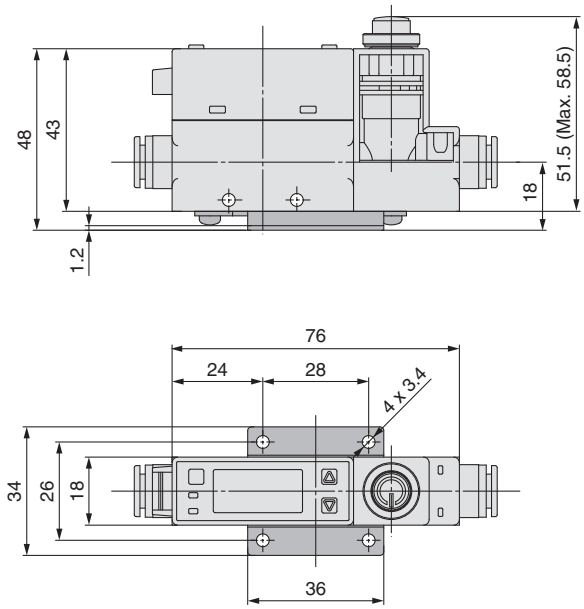

DIN rail mounting

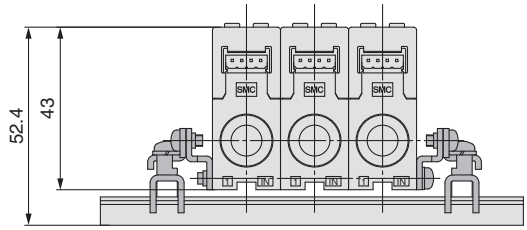

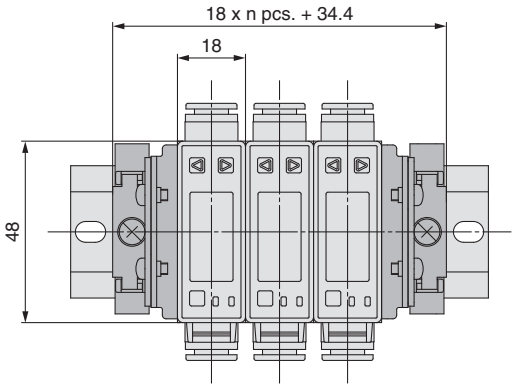

- DIN rail is prepared by customer.
- DIN rail is not suitable for port size F02 (G1/4).

Dimensions

PFMB7501/7102

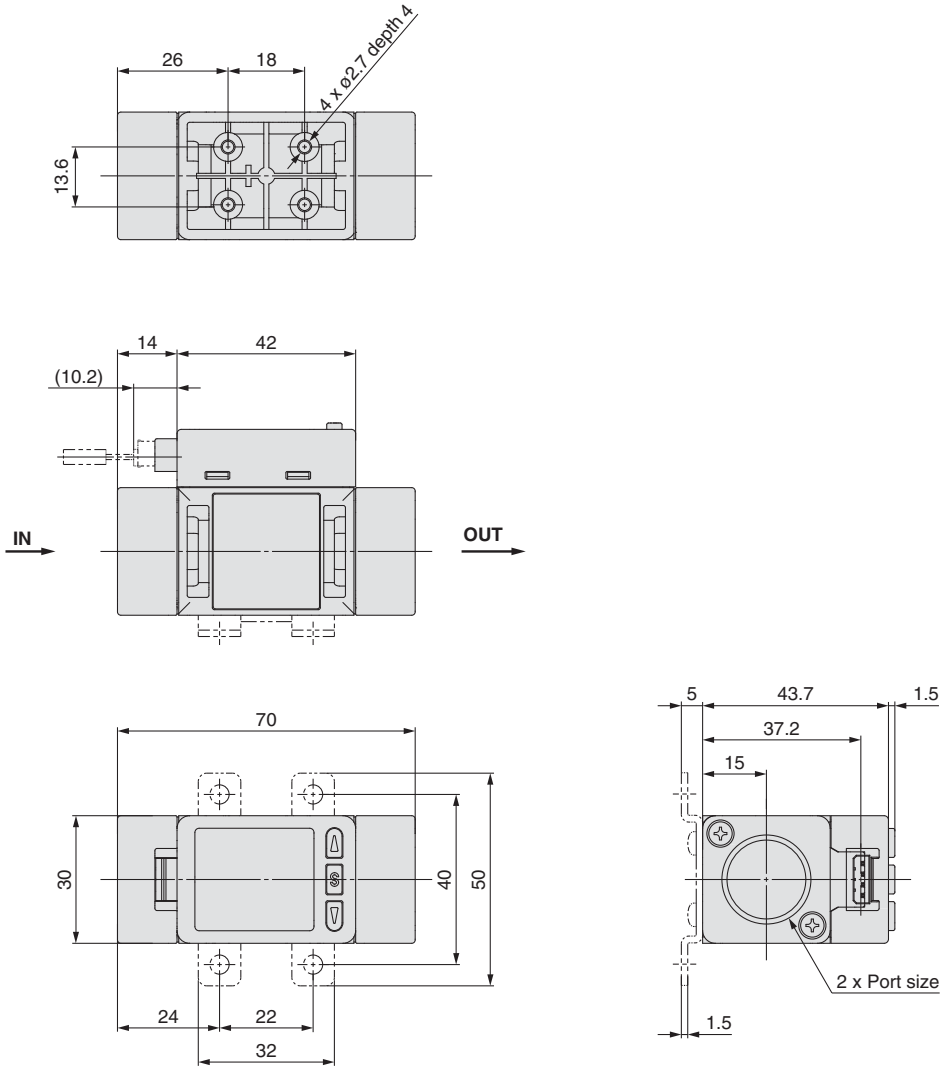

Lead wire with connector
ZS-33-D

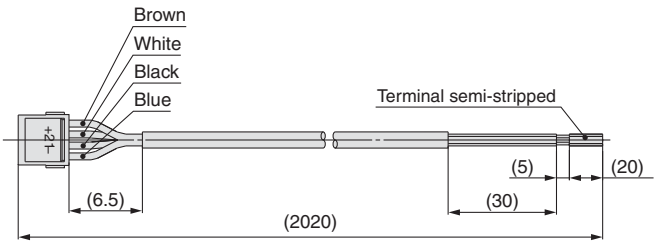

Cable Specifications

Conductor	**Nominal cross section area**	AWG26
	External diameter	Approx. 0.50 mm
Insulation	**External diameter**	Approx. 1.00 mm
	Colours	Brown, White, Black, Blue
Sheath	**Material**	Oil-resistant PVC
Finished external diameter		ø3.5

Note) For wiring, refer to the Operation Manual from the SMC website.

Function Details

■ Output operation

The output operation can be selected from the following:
Output (hysteresis mode and window comparator mode) corresponding to instantaneous flow, or output (accumulated output and pulse output) corresponding to accumulated flow.

Note) At the time of shipment from the factory, it is set to hysteresis mode and normal output.

■ Display colour

The display colour can be selected for each output condition. The selection of the display colour provides visual identification of abnormal values. (The display colour depends on OUT1

Green for ON, Red for OFF
Red for ON, Green for OFF
Red all the time
Green all the time

■ Reference condition

The display unit can be selected from standard condition or normal condition.

Standard condition: Flow rate converted to a volume at 20°C and 1 atm (atmosphere)
Normal condition: Flow rate converted to a volume at 0°C and 1 atm (atmosphere)

■ Display mode

The display mode can be selected from instantaneous flow or accumulated flow.

Instantaneous flow display
Accumulated flow display

■ Response time

The response time can be selected to suit the application. (default setting is 1 second.)
Abnormalities can be detected more quickly by setting the response time to 0.05 seconds.
The effect of fluctuation and flickering of the display can be reduced by setting the response time to 2 seconds.

0.05 sec.
0.1 sec.
0.5 sec.
1 sec.
2 sec.

■ Power-saving mode

The display can be turned off to reduce the power consumption.
In this power-saving mode, decimal points flash on the main screen.
If any button is pressed during power-saving mode, the display reverts to normal for 30 seconds to allow checking of the flow etc.

■ Setting of security code

The user can select whether a security code must be entered to release key lock. At the time of shipment from the factory, it is set such that the security code is not required.

■ External input function

This function can be used only when the optional external input is present. The accumulated flow, peak value and bottom value can be reset remotely.

Accumulated flow external reset: A function to reset the accumulated flow value when an external input signal is applied.
In accumulated increment mode, the accumulated value will reset to, and increase from zero.
In accumulated decrement mode, the accumulated value will reset to, and decrease from the set value.

∗ When the accumulated value is memorized, every time the accumulated flow external reset is activated, the memory device (EEPROM) will be accessed. Take into consideration the maximum number of times the memory device can be accessed, 1 million times. The total of external input times and accumulated value memorizing time interval should not exceed 1 million times.

Peak/Bottom reset: Peak and bottom value are reset.

■ Forced output function

The output is turned on/off in a fixed state when starting the system or during maintenance. This enables confirmation of the wiring and prevents system errors due to unexpected output.
For the analogue output type, when ON the output will be 5 V or 20 mA, and when OFF, it will be 1 V or 4 mA.

∗ Also, the increase or decrease of the flow and temperature will not change the on/off status of the output while the forced output function is activated.

■ Accumulated value hold

Accumulated value is not cleared even when the power supply is turned off.
The accumulated value is memorized every 2 or 5 minutes during measurement, and continues from the last memorized value when the power supply is turned on again.
The life time of the memory element is 1 million access cycles. Take this into consideration before using this function.

■ Peak/Bottom value display

The maximum (minimum) flow rate is detected and updated from when the power supply is turned on. In peak (bottom) value display mode, this maximum (minimum) flow rate is displayed.

■ Keylock function

Prevents operation errors such as accidentally changing setting values.

■ Analogue output free range function

Allows the flow that generates an output of 5 V or 20 mA to be changed.
The value can be changed 10% of maximum rated flow to maximum display value.

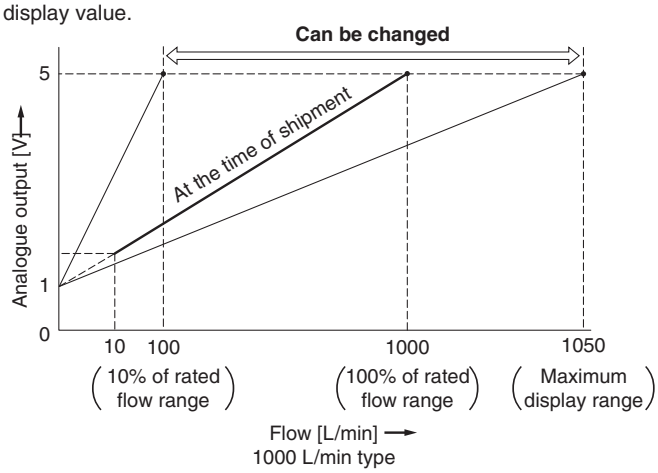

■ Reversed display mode

When the switch is used upside down, the orientation of the display can be rotated to make it easier to read by using the display rotating function.

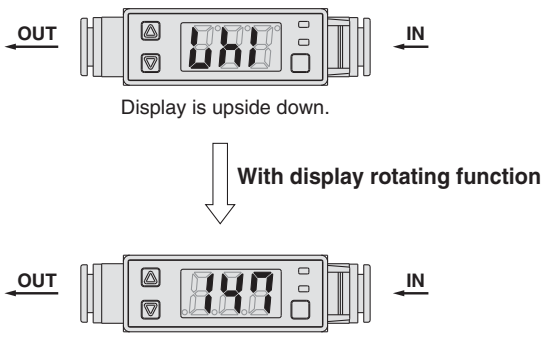

■ Reset to the default settings.

The product can be returned to its factory default settings.

■ Error display function

When an error or abnormality arises, the location and contents are displayed.

Display		Description	Contents	Action
Er 1		OUT1 over current error	Load current of 80 mA or more is applied to the switch output (OUT1).	Eliminate the cause of the overcurrent by turning off the power supply and then turn on it again.
Er2		OUT2 over current error	Load current of 80 mA or more is applied to the switch output (OUT2).	
HHH		Instantaneous flow error	The flow rate exceeds the upper limit of indicated flow rate range.	Decrease the flow rate.
LLL		Reverse flow error	There is a reverse flow equivalent to –5% or more.	Turn the flow to correct direction.
999999999 (“999” will flash in any of upper, middle, lower 3-digit displays.)	PFMB7201 PFMB7501 PFMB7102	Accumulated flow error	The flow rate exceeds the accumulated flow rate range.	Clear the accumulated flow rate.
Er0		System error	Displayed if an internal error has occurred.	Turn the power off and on again.
Er4				
Er6				
Er8				

If the failure cannot be solved after the above instructions are performed, please contact SMC for investigation.

⚠ Safety Instructions

These safety instructions are intended to prevent hazardous situations and/or equipment damage. These instructions indicate the level of potential hazard with the labels of **"Caution," "Warning"** or **"Danger."** They are all important notes for safety and must be followed in addition to International Standards (ISO/IEC)*1), and other safety regulations.

⚠ Caution: **Caution** indicates a hazard with a low level of risk which, if not avoided, could result in minor or moderate injury.

⚠ Warning: **Warning** indicates a hazard with a medium level of risk which, if not avoided, could result in death or serious injury.

⚠ Danger : **Danger** indicates a hazard with a high level of risk which, if not avoided, will result in death or serious injury.

*1) ISO 4414: Pneumatic fluid power – General rules relating to systems.
ISO 4413: Hydraulic fluid power – General rules relating to systems.
IEC 60204-1: Safety of machinery – Electrical equipment of machines. (Part 1: General requirements)
ISO 10218-1: Manipulating industrial robots - Safety.
etc.

⚠ Warning

1. **The compatibility of the product is the responsibility of the person who designs the equipment or decides its specifications.**
   Since the product specified here is used under various operating conditions, its compatibility with specific equipment must be decided by the person who designs the equipment or decides its specifications based on necessary analysis and test results. The expected performance and safety assurance of the equipment will be the responsibility of the person who has determined its compatibility with the product. This person should also continuously review all specifications of the product referring to its latest catalogue information, with a view to giving due consideration to any possibility of equipment failure when configuring the equipment.
2. **Only personnel with appropriate training should operate machinery and equipment.**
   The product specified here may become unsafe if handled incorrectly. The assembly, operation and maintenance of machines or equipment including our products must be performed by an operator who is appropriately trained and experienced.
3. **Do not service or attempt to remove product and machinery/equipment until safety is confirmed.**
   1. The inspection and maintenance of machinery/equipment should only be performed after measures to prevent falling or runaway of the driven objects have been confirmed.
   2. When the product is to be removed, confirm that the safety measures as mentioned above are implemented and the power from any appropriate source is cut, and read and understand the specific product precautions of all relevant products carefully.
   3. Before machinery/equipment is restarted, take measures to prevent unexpected operation and malfunction.
4. **Contact SMC beforehand and take special consideration of safety measures if the product is to be used in any of the following conditions.**
   1. Conditions and environments outside of the given specifications, or use outdoors or in a place exposed to direct sunlight.
   2. Installation on equipment in conjunction with atomic energy, railways, air navigation, space, shipping, vehicles, military, medical treatment, combustion and recreation, or equipment in contact with food and beverages, emergency stop circuits, clutch and brake circuits in press applications, safety equipment or other applications unsuitable for the standard specifications described in the product catalogue.
   3. An application which could have negative effects on people, property, or animals requiring special safety analysis.
   4. Use in an interlock circuit, which requires the provision of double interlock for possible failure by using a mechanical protective function, and periodical checks to confirm proper operation.

⚠ Caution

1. **The product is provided for use in manufacturing industries.**
   The product herein described is basically provided for peaceful use in manufacturing industries.
   If considering using the product in other industries, consult SMC beforehand and exchange specifications or a contract if necessary.
   If anything is unclear, contact your nearest sales branch.

Limited warranty and Disclaimer/ Compliance Requirements

The product used is subject to the following "Limited warranty and Disclaimer" and "Compliance Requirements".
Read and accept them before using the product.

Limited warranty and Disclaimer

1. The warranty period of the product is 1 year in service or 1.5 years after the product is delivered, wichever is first.*2)
   Also, the product may have specified durability, running distance or replacement parts. Please consult your nearest sales branch.
2. For any failure or damage reported within the warranty period which is clearly our responsibility, a replacement product or necessary parts will be provided.
   This limited warranty applies only to our product independently, and not to any other damage incurred due to the failure of the product.
3. Prior to using SMC products, please read and understand the warranty terms and disclaimers noted in the specified catalogue for the particular products.

   ***2) Vacuum pads are excluded from this 1 year warranty.**
   A vacuum pad is a consumable part, so it is warranted for a year after it is delivered.
   Also, even within the warranty period, the wear of a product due to the use of the vacuum pad or failure due to the deterioration of rubber material are not covered by the limited warranty.

Compliance Requirements

1. The use of SMC products with production equipment for the manufacture of weapons of mass destruction (WMD) or any other weapon is strictly prohibited.
2. The exports of SMC products or technology from one country to another are governed by the relevant security laws and regulations of the countries involved in the transaction. Prior to the shipment of a SMC product to another country, assure that all local rules governing that export are known and followed.

⚠ Safety Instructions Be sure to read "Handling Precautions for SMC Products" (M-E03-3) before using.

SMC Corporation (Europe)

Austria	☎ +43 (0)2262622800	www.smc.at	office@smc.at
Belgium	☎ +32 (0)33551464	www.smcpneumatics.be	info@smcpneumatics.be
Bulgaria	☎ +359 (0)2807670	www.smc.bg	office@smc.bg
Croatia	☎ +385 (0)13707288	www.smc.hr	office@smc.hr
Czech Republic	☎ +420 541424611	www.smc.cz	office@smc.cz
Denmark	☎ +45 70252900	www.smcdk.com	smc@smcdk.com
Estonia	☎ +372 6510370	www.smcpneumatics.ee	smc@smcpneumatics.ee
Finland	☎ +358 207513513	www.smc.fi	smcfi@smc.fi
France	☎ +33 (0)164761000	www.smc-france.fr	promotion@smc-france.fr
Germany	☎ +49 (0)61034020	www.smc.de	info@smc.de
Greece	☎ +30 210 2717265	www.smchellas.gr	sales@smchellas.gr
Hungary	☎ +36 23511390	www.smc.hu	office@smc.hu
Ireland	☎ +353 (0)14039000	www.smcpneumatics.ie	sales@smcpneumatics.ie
Italy	☎ +39 0292711	www.smcitalia.it	mailbox@smcitalia.it
Latvia	☎ +371 67817700	www.smclv.lv	info@smclv.lv
Lithuania	☎ +370 5 2308118	www.smclt.lt	info@smclt.lt
Netherlands	☎ +31 (0)205318888	www.smcpneumatics.nl	info@smcpneumatics.nl
Norway	☎ +47 67129020	www.smc-norge.no	post@smc-norge.no
Poland	☎ +48 (0)222119616	www.smc.pl	office@smc.pl
Portugal	☎ +351 226166570	www.smc.eu	postpt@smc.smces.es
Romania	☎ +40 213205111	www.smcromania.ro	smcromania@smcromania.ro
Russia	☎ +7 8127185445	www.smc-pneumatik.ru	info@smc-pneumatik.ru
Slovakia	☎ +421 (0)413213212	www.smc.sk	office@smc.sk
Slovenia	☎ +386 (0)73885412	www.smc.si	office@smc.si
Spain	☎ +34 902184100	www.smc.eu	post@smc.smces.es
Sweden	☎ +46 (0)86031200	www.smc.nu	post@smc.nu
Switzerland	☎ +41 (0)523963131	www.smc.ch	info@smc.ch
Turkey	☎ +90 212 489 0 440	www.smcpnomatik.com.tr	info@smcpnomatik.com.tr
UK	☎ +44 (0)845 121 5122	www.smcpneumatics.co.uk	sales@smcpneumatics.co.uk

SMC CORPORATION Akihabara UDX 15F, 4-14-1, Sotokanda, Chiyoda-ku, Tokyo 101-0021, JAPAN Phone: 03-5207-8249 FAX: 03-5298-5362

1st printing RV printing RV 00 Printed in Spain