Product data sheet
EZQ 25/4 D

EZQ 25/4 D

Axial wall fan with square wall plate, DN 250, single-phase AC

Technical Data

Article	EZQ 25/4 D
Model	Square wall plate
Air flow volume	1,000 m³/h
Rotating speed	1,425 1/min
Speed controllable	✔
Reversing capacity	✔
Type of voltage	Alternating current
Rated voltage	230 V
Frequency	50 Hz
Nominal output	32 W
I_{nom}	0.16 A
I_{Max}	0.2 A
Degree of protection (IP)	54
Insulation class	B
Type of installation	Surface-mounted
Installation position	horizontal, vertical
Material	Sheet steel, galvanised
Weight	6.3 kg
Nominal size	250 mm
Airstream temperature at nominal current	60 °C
Airstream temperature at I_{Max}	60 °C
Sortiment	C
EAN	4012799834878
Article number	0083.0487
Aggregate level L_{WA7}, S5 (housing and free inlet sound pressure level)	64 dB(A)
Aggregate level L_{WA8}, S5 (housing and free outlet sound pressure level)	66 dB(A)

Characteristic curve

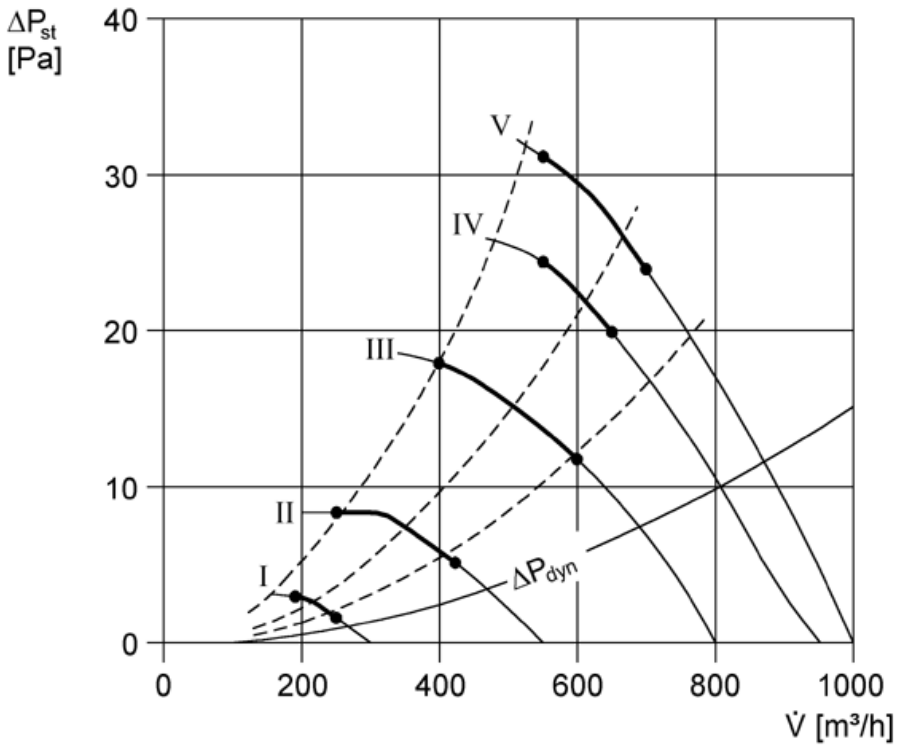

Dimensions [mm]
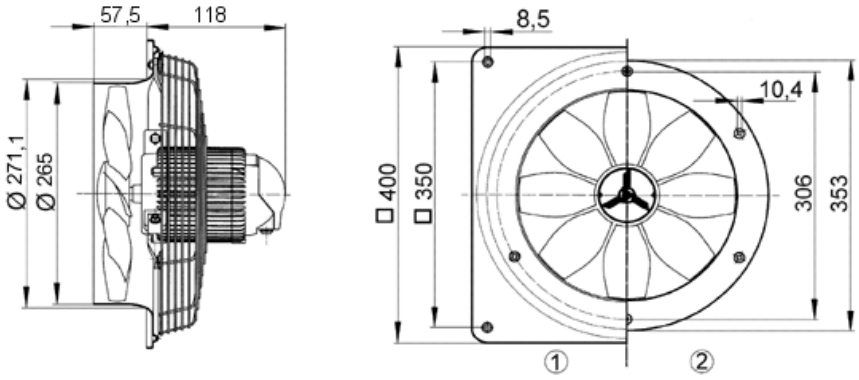
① Steel wall plate = EZQ/DZQ model
② Steel wall ring = EZS/DZS model